Pengyou
Pengyou power fitting

朋友电力科技有限公司
ZHEJIANG FRIEND POWER TECHNOLOGY CO., LTD

地址：浙江乐清市沙湖工业区乐湖路665号
Add: No.665, Lehu Road, Shahu Industrial Zone,
Yueqing, Zhejiang Province
电话 Tel：0577-61670222 62706802
传真 Fax：0577-62706802
http：//www.pengyoujinju.net
E-mail：364751823@qq.com
全国统一客服热线：

Pengyou
Pengyou power fitting

朋友电力科技有限公司

www.pengyoujinju.net

Pengyou
Pengyou power fitting

产品造型手册
<<Products Manual

朋友电力科技有限公司
FRIEND POWER TECHNOLOGY CO., LTD

POWER FITTING

线路金具/接续金具/设备金具/电力金具
Line fittings / Splicing fittings /
Equipment fittings / Power fittings

Pengyou
Pengyou power fitting

董事长 PRESIDENG

LOOKING TO THE FUTURE
展望未来

朋友电力科技未来发展战略：
一、以工业生产为基础，以金融产业为后盾，以地产贸易相互动，促进产业多元化和国际化；
二、以吕牌为旗帜，推行行业品牌大众化，国内品牌国际化；
三、以营销为龙头，促进网络营销与品牌营销协调发展，实现营销全球化；
四、以科技创新为动力，加快国内，国际间的技术合作与新品开发，提高核心竞争力；
五、以人力资源为根本，营造人才发展环境，实现人才国际化。

Pengyou
Pengyou power fitting

朋友电力科技
pengyou power technology

COMPANY PROFILE
企业简介

朋友电力科技有限公司是一家注册资金5188万元，厂房建筑面积11000多平方米，拥有各种先进的专业生产设备110多台，专业检测设备30多台的集工、科、贸于一体的现代化新型企业。公司现有员工280余人，具有中级职称的专业技术人员11人，高级工程技术人员3人，高级管理人员4人，中级管理人员20余人；一线员工具有大专学历45人，中专学历60人，本公司技术力量雄厚，生产工艺先进，产品规格齐全，并能根据顾客的特殊要求进行设计开发与生产，对电力配套产品更是集设计开发、生产经营、销售服务于一体。且已获得国家质量总局颁发的生产许可证（XK04—001—00144同），同时通过ISO9001：2000国际质量体系认证。产品中标国家电网10KV电力金具浙江省，湖北省，安徽省，河南省，重庆，宁夏,新疆电力公司协议库存材料采购。南方电网云南省贵州省线路金具年度框架协议采购。内蒙古电力集团基建工程设备材料采购，并已远销加拿大、巴西、美国、日本、墨西哥、阿根延、东南亚、欧洲、中东等30多个国家和地区。是我国最大的电力金具专业生产企业之一。

公司本着“质量求生存、科技求发展”的原则；“以科技服务电力事业”的宗旨，坚持以“创朋友品牌、共同求发展”的企业目标；致力于电力工业的繁荣和发展。

公司员工极积发扬“团结拼搏、励精图治、务实创新、追求卓越”的敬业精神，以高度的主人翁责任感、使命感，与电力系统中的同行们同呼吸、共命运，在企业的不断发展与壮大中，勤奋敬业，尽职尽责，奋力拼搏，无私奉献。作为电力系统这个大家庭中的一员，公司本着以默契配合，相互接纳，取长补短，风雨同舟，共同创造财富的原则。公司全体员工更是一个坚强的战斗堡垒，在创朋友品牌的道路上，朋友人会披荆斩棘，乘风破浪，无往不胜，所向披靡。朋友人会以一流的技术、一流的质量、一流的服务、一流的管理、一流的信誉、一流的团队，为您提供优质的产品。

朋友电力公司奉行“诚信经营、互惠互利”的经营宗旨。以打造“朋友”品牌为理念，稳健务实、锐意创新，与广大供电精英携手共进、为我国电力事业的繁荣和发展贡献一份力量。

Zhejiang Pengyou Power Technology co., Ltd. is a new modern enterprise integrating industry with technology and trade, has registered fund 51.88 million yuan, covers a plant building area of 11,000 m2, has more than 110 sets of various advanced professional production equipment, and more than 30 sets of professional checkout test equipment, Now, the company owns more than 280 employees, including 11 middle-rank professional titled speciali zed technical personnel, 3 senior engineering technical personnel, 4 top management personnel, 20-odd middle management personnel, and 105 first-line staff who have received technical secondary education or higher, The company boasts of strong technical force, advanced manufacturing technique, and complete product specifications, is able to develop and carry out production according to customers' special requirements, integrating design&development with production& management and marketing& service for power fitting products, has obtained the manufacturing license (license No.:XK04-001-00144) issued by General Administration of Quality Supervision, Inspection and Quarantine of PRC and successfully passed IS09001 : 2008 international quality system certifi cation. The products are exported to Canada, Brazil, America, Japan, Mexico, Argentina, Southeast Asia,Europe, Middle East and so on more than 30 countries and districts, The company has become one of the largest professional manufacturers of power fittings in China.

The performance of insulation piercing connectors and other products developed by the company has reached the international advanced level and is far ahead of the similar products in domestic market. The company widely employs the latest technology and material formula for design and installation, which sharply improves the product performance and reilability of electric connection, realizes the most safe connection modes with most simple metheds.

Abiding by the principle of "seeking existence with quality, peomoting development with technology" as well as the tenet of "serving the power industry with science and technology", the company insists on the ente rprise goal of"creating PENGYOU brand, seeking mutual development", dedicates to the prosperity and development of power industry.

The staff of the company actively promote the spirit of " unity& hard working, ambitions ideals, practicality&innovation, pursuit of super -excellence, with strong sense of responsibility and mission of an ownership, breathe the same air and share the same fate with the craft brothers of power system, work hard and make selfless dedication along with the development of enterprise. As a member of the family of power system, the company sbides by the principle of cooperation, learning from each other, standing together regardless of situation, and creating wealth together. Company ' s staff is a strong fighting force, in the way of casting the brand PENGYOU, Pengyou people would break through brambles and thorns, provide top grade products for you with first-class technology, first-class quality, first-class service, first-class management, first-class credit standing and first-class team.

Pengyou Company pursues the operation tenet of "good faith management, mutual benefit" , sincerely wishes to establish long-term cooperation relationship with customers everywhere.

POWER FITTING

线路金具/接续金具/设备金具/电力金具
Line fittings / Splicing fittings /
Equipment fittings / Power fittings

Pengyou
Pengyou power fitting

朋友电力科技
pengyou power technology

MARKETING NETWORK
营销网络

经过多年的发展，本公司已经建立起了完善的销售网络，随着公司规模的扩展，产品销集区域不断扩大，公司在全国31个省自治区建立了100多家销售分支机构，产品现已畅销全国各大中城市，部分产品已销往国际市场。

本公司销售的不仅仅是产品，更是完美的服务。我们将继往开来，为社会创造更多的人性化产品。在世界经济全球化进程大大加速的今天，我们越来越感觉到“合作发展、共同提高”的必要。

公司开放式的创新和学习型的创新，进一步扩大国际合作，充分利用全球科技资源，与各国加强合作和交流，互相借鉴、共同发展。

POWER FITTING

线路金具/接续金具/设备金具/电力金具
Line fittings / Splicing fittings /
Equipment fittings / Power fittings

E– COMMERCE
电子商务

公司以互联网为营销传播渠道，建立了电子商务网上交易平台，直接向客户提供网上洽谈交易的贸易环境，实现网上销售。

Pengyou
Pengyou power fitting

朋友电力科技
pengyou power technology

QUALIFICATION CERTIFICATE
证书总汇

开户许可证

核准号：J3331300170060 4　　编号：3310-04005633

经审核，朋友电力科技有限公司　符合开户条件，准予开立基本存款账户。

法定代表人（单位负责人）巢亚明　　开户银行 温州银行股份有限公司柳市支行

账　号 706000120190007953

发证机关（盖章）
2015 07 09
年 月 日

税务登记证

纳税人名称：朋友电力科技有限公司

法定代表人(负责人)：巢亚明

地　　址：乐清市柳市镇沙后村

登记注册类型：其他有限责任公司

经营范围：电力金具、电缆附件、预绞丝金具、电工工具、高低压电器、电子元器件、灯具配件、塑料件、仪器仪表配件（不含计量器具）、机电设备、物通产、电器计量器、钢铁冷轧薄板加工、制造、加工、销售、货物进出口、技术进出口。（依法须经批准的项目，经相关部门批准后方可开展经营活动）

批准设立机关：浙江省温州市乐清市工商局

扣缴义务：依法确定

发证机关（盖章）
2011年 月 日

国家税务总局监制

朋友电力科技

线路金具/接续金具/设备金具/电力金具
POWER FITTING

税务登记证（副本）

温州市科技（创新）型企业证书

兹认定

朋友电力科技有限公司

为温州市科技（创新）型企业

温州市科学技术局

Certificate of Approval

Awarded to

Zhejiang Pengyou Electre Power Hardware Co., Ltd.

ISO 9001

ISO 9001

IAF

Beijing Zhongliantianrun Certification Center

营业执照（副本）

注册号 330382000003413 (1/3)

名　称 朋友电力科技有限公司
类　型 有限责任公司
住　所 乐清市柳市镇沙后村
法定代表人 巢亚明
注册资本 伍仟壹佰捌拾万元整
成立日期 2007年07月19日
营业期限 2007年07月19日至长期
经营范围 电力金具、电缆附件、预绞丝金具、电工工具、高低压电器、电子元器件、灯具配件、塑料件、仪器仪表配件（不含计量器具）、电线电缆、模具子、电器计量器、钢铁冷轧薄板加工、制造、加工、销售、货物进出口、技术进出口。（依法须经批准的项目，经相关部门批准后方可开展经营活动）

登记机关
2015年06月24日

营业执照

注册号 330382000003413

名　称 朋友电力科技有限公司
类　型 有限责任公司
住　所 乐清市柳市镇沙后村
法定代表人 巢亚明
注册资本 伍仟壹佰捌拾万元整
成立日期 2007年07月19日
营业期限 2007年07月19日至长期
经营范围 电力金具、电缆附件、预绞丝金具、电工工具、高低压电器、电子元器件、灯具配件、塑料件、仪器仪表配件（不含计量器具）、电线电缆、模具子、电器计量器、钢铁冷轧薄板加工、制造、加工、销售、货物进出口、技术进出口。（依法须经批准的项目，经相关部门批准后方可开展经营活动）

登记机关
2015年06月24日

营业执照（副本）

注册号 330382000003413 (1/3)

名　称 朋友电力科技有限公司
类　型 有限责任公司
住　所 乐清市柳市镇沙后村
法定代表人 巢亚明
注册资本 伍仟壹佰捌拾万元整
成立日期 2007年07月19日
营业期限 2007年07月19日至长期
经营范围 电力金具、电缆附件、预绞丝金具、电工工具、高低压电器、电子元器件、灯具配件、塑料件、仪器仪表配件（不含计量器具）、电线电缆、模具子、电器计量器、钢铁冷轧薄板加工、制造、加工、销售、货物进出口、技术进出口。（依法须经批准的项目，经相关部门批准后方可开展经营活动）

登记机关
2015年06月24日

中华人民共和国
组织机构代码证
（副本）

代　码 66515867-0

机构名称 朋友电力科技有限公司

机构类型 企业法人
法定代表人 巢亚明
地　址 浙江省乐清市柳市镇沙后村

有效期 自2015年06月26日 至2019年06月25日
颁发单位 乐清市质量技术监督局
登记号 组代管330382-116625-1

说明

中华人民共和国
国家质量监督检验检疫总局

年检记录

NO.2015 2298993

中华人民共和国
组织机构代码证

代　码 66515867-0

机构名称 朋友电力科技有限公司

机构类型 企业法人
法定代表人 巢亚明
地　址 浙江省乐清市柳市镇沙后村

有效期 自2015年06月26日 至2019年06月25日
颁发单位 乐清市质量技术监督局
登记号 组代管330382-116625

说明

中华人民共和国
国家质量监督检验检疫总局

年检记录

NO.2015 2452993

Pengyou
Pengyou power fitting

朋友电力科技
pengyou power technology

POWER FITTING

线路金具/接续金具/设备金具/电力金具
Line fittings / Splicing fittings /
Equipment fittings / Power fittings

Pengyou
Pengyou power fitting
朋友电力科技
pengyou power technology

PRODUCTS CONTENTS
产品目录

A 架空绝缘金具 AERIAL INSULATION CONDUCTOR FITTING 1-30
B 电缆金具 ELECTRIC CABLE FITTING 31-42
C 变电金具 POWERSTATION FITTING 43-93
D 电站金具 POWERSTATION FITTING 94-110
E 线路金具 CIROUIT FITTING 111-189

Pengyou
Pengyou power fitting

目 录
CONTENTS

A 架空绝缘金具 AERIAL INSULATION CONDUCTOR FITTING 1-30

02 穿刺线夹性能、特点和命名方式
PERFORMANCE,CHARACTERISTICS AND NAMING OF INSULATION PIERCING CONNECTOR

04 JJC型穿刺线夹(1kV)
JJC TYPE PIERCING CONNECTOR(1kV)

06 JJC10型穿刺线夹(10kV)
JJC10 TYPE PIERCING CONNECTOR(10kV)

07 JJCL异型穿刺线夹(1kV)
JJCL NON-CONVENTIONAL PIERCING CONNECTOR(1kV)

08 JJCF型穿刺接地线夹(1kV)
JJCF TYPE PIERCING GROUNDING CONNECTOR(1kV)

09 JJCF10型穿刺接地线夹(10kV)
JJCF10 TYPE PIERCING GROUNDING CONNECTOR(10kV)

11 FHJ10系列穿刺型防弧线夹性能、特点和命名方式
PERFORMANCE,CHARACTERISTICS AND NAMING OF FHJ10 SERIES PIERCING APC-PROTECTION CONNECTOR

11 FHJ10系列穿刺型防弧线夹安装说明
INSTALLATION OF FHJ10 SERIES PIERCING ARC-PROTECTION CONNECTOR

12 FHJ10系列穿刺型防弧线夹
FHJ10 SERIES PIERCING ARC-PROTECTION CONNECTOR

14 NES(JNF)四芯耐张线夹(锚固金具)
NES(JNF) FOUR-CORE COLLECTING STRAIN CLAMP (ANCHOR FITTINGS)

15 JBL JBT JB-TL系列异型并沟线夹及绝缘罩
NON CONVENTIONAL TYPE COMBINED GROOVE CABLE CLEAT AND INSULATING SHIELD

16 JCG型跨径接户线夹及绝缘罩
JCG TYPE SPAN CONNECTION USERS CLAMP AND INSULATING SHIELD

17 10kV架空绝缘线路耐张串装装置图(一)、(二)
THE RESISTIBLE TENSION SETTING DRAWIING (1),(2) OF 10kV AERIAL INSULATING LINE

18 10kV架空绝缘线路耐张串装置图(三)、(四)
THE RESISTIBLE TENSION SETTING DRAWIING (3),(4) OF 10kV AERIAL INSULATING LINE

19 NXJ系列楔型铝合金耐张线夹
NXJ SERIES WEDGE TYPE ALUMINUM ALLOY OVER-TENSION RESISTANT CLAMP

21 NXL系列楔型耐张线夹及绝缘罩
NXL SERIES WEDGE TYPE OVER-TENSION RESISTANT CLAMP AND INSULATING SHEATH

22 NXT系列楔型耐张线夹及绝缘罩
NXT SERIES WEDGE TYPE OVER-TENSION RESISTANT CLAMP AND INSULATING SHEATH

23 NLL系列配电(变电)用螺栓型铝合金耐张线夹及绝缘罩
NLL SERIES POWER DSTRIBUTION (POWER TRANSFORVER) USES BOLT ALUMINUM ALL OY STRAM CLAMP AND INSULATING COVER

24 NXH系列铝合金耐张线夹
NXH SERIES ALUMINUM ALLOY OVER-TENSION RESISTANT CLAMP

25 NP-25/50型盘形耐张线夹及绝缘罩
NP-25/50 TYPE DISH OVER-TENSION RESISTANT CLAMP AND INSULATING SHEATH

26 SL双铁头瓷拉棒及绝缘罩
SL DOUBLE HARDHEAD PORCELAIN PULL ROD AND INSULATING SHEATH

26 P型平行挂板及绝缘罩
P TYPE PARALLEL SUSPENSION BOARD AND INSULATION SHEATH

27 JTL JTT JTG系列T型线夹及绝缘罩
JTL JTT JTG SERIES T TYPE CLAMP AND INSULATING SHEATH

28 J10FKLJ10FKG铝、铜铝过渡分支线夹及绝缘罩
J10FKL J10FKG ALUMINIUM,COPPERTO ALLUMINUM ADAPTERTEE CONNECTOR AND INSULATING SHEATH

28 TTX绝缘跨径T型线夹
T-CONNECTOR FOR INSULATING AND SPANNING DIAMETER

29 JDT铜单槽线夹
JDT COPPER SINGLE GROOVE CLAMP

29 JY系列接续管及绝缘罩
JY SERIES CONNECTING PIPE AND INSULATING SHEATH

30 J10FKLJ10FKG铝、铜铝过渡分支线夹及绝缘罩
J10FKL J10FKG ALUMINIUM,COPPERTO ALLUMINUM ADAPTERTEE CONNECTOR AND INSULATING SHEATH

30 FCJ FHC型绝缘接线夹
FCJ FHC TYPE INSULATING CONNECTING CLAMP

30 JXGY JXGX JXGG悬挂线夹
JXGY JXGX JXGG SUSPENSION CLAMP

B 电缆金具 ELECTRIC CABLE FITTING 31-42

32 DTL系列铜铝接线端子
COPPER-ALUMINIUM CONNECTING TERMINALS

33 DT DL系列铜、铝接线端子
COPPER, ALUMINIUM CONNECTING TERMINALS

34 DT(G) JG系列铜接线端子
COPPER CONNECTING TERMINALS

35 GT-1 GL-1连接管(通孔型)
CONNECTING TUBE(PASSING THROUGH)

36 OT铜开口接线鼻
COPPER CONNECTING TERMINALS

36 GTL连接管(堵油型)
CONNECTING TUBE(OIL SEAL)

37 GT-1GL-2连接管(通孔型)
CONNECTING TUBE (PASSING THROUGH)

38 SC(JGK)、SC(JGA)引进铜接线端子
IMPORTED COPPER TERMINALS

39 SC(JGY) SC(JGB)引进窥口三角型，喇叭型铜接线端子
IMPORTED SPY TRIANGLE,BELL MOUTH COPPER CONNECTING TERMINALS

40 GTY 引进铜接线管
IMPORTED COPPER CONNECTNG TUBE

41 DLT 系列铝铜接线端子
ALUMINIUM-COPPER CONNECTING TERMINALS

41 C45插针
C45 PLUG-IN NEEDLE

42 DTF防水型铜端子
WATER-PROOF COPPER TERMINAL

C 变电金具 POWERSTATION FITTING 43-93

43 设备线夹 TERMINAL FITTING

44 SYG 铜铝过渡设备线夹(压接型A类)
SYG COPPER-ALUMINIUM TRANSITION TERMINAL CONNECTING CLAMP(COMPERSSION TYPE A)

45 SYG 铜铝过渡设备线夹(压接型B类)
SYG COPPER-ALUMINIUM TRANSITION TERMINAL CONNECTING CLAMP(COMPERSSION TYPEB)

46 SY系列设备线夹(压接型A类)
SY ALUMINIUM TERMINAL CONNECTING CAMP(COMPERSSIN TYPE A)

47 SY系列设备线夹(压接型B类)
SY ALUMINIUM TERMINAL CONNECTING CAMP(COMPERSSIN TYPE B)

48 SY系列设备线夹(压接型C类)
SY ALUMINIUM TERMINAL CONNECTING CAMP(COMPERSSIN TYPE C)

49 SY(T)铜压接型设备线夹(压接型A、B型)
SY(T) COMPRESSION TERMINAL CONNECTOR (COMPERSSIN TYPE A,B)

Pengyou
Pengyou power fitting

目 录
CONTENTS

50 SL85型铝设备线夹
SL85 ALUMINIUM TERMINAL CONNECTING CLAMP

50 SL74型铝设备线夹
SL74 ALUMINIUM TERMINAL CONNECTING CLAMP

51 螺栓型铜铝过渡设备线夹
COPPER-ALUMINUM TIANSITION TERMINAL CONNECTIONG CLAMP(BOLT TYPE)

51 SLG铜铝设备线夹
SLG COPPER-TERMINAL CONNECTORS

51 STL74型铜铝设备线夹
STL74 COPPER-TERMINAL CONNECTORS

52 ST系列螺栓型设备线夹、铜铝弓子卡
SL COPPER BOLT TYPR TERMINAL CONNECTING CLAMP

52 ST系列铜设备线夹(七四标准)
ST COPPER TERMINAL CONNECTORS(1974 STANDARD)

53 JT JTL JL 铜、铝、铜铝接线夹
COPPER ALUMINIUM,COPER-ALIMINUM JOINTING CLAMP

54 梅花型黄铜接线夹
COPPER CONNECTING CLAMPS(WINTERSWEET TYPE)

55 Y2 带电装卸线夹
Y2 SPECIAL CLAMPS

55 铜活动线夹
COPPER CONNECTING CLAMPS(WINTERSWEET TYPE)

56 变压器用铜铝接线夹(特制带扣)
COPPER ALUMINIUM CLIP TERMINEL

56 变压器用铜接线夹(特制带扣)
COPPER CLIP TERMINEL

56 铜铝螺纹线夹
COPPER ALUMINIUM THREAD CLAMP

57 SBK-1 双孔型变压器用线夹
SBK-1 TRANSFORMER CLAMP (DOUBLE-HOLE)

57 SBK-2 双孔型变压器用线夹
SBK-2 TRANSFORMER CLAMP (DOUBLE-HOLE)

57 SBK-3 双孔型变压器用线夹
SBK-3 TRANSFORMER CLAMP (DOUBLE-HOLE)

58 SSY 双导线铝设备线夹(压缩型0°)
SSY TERMINAL CONNECTOR FOR DOUBLE-BUNDLE CONDUCTOR(COMPRESSION TYPE 0°)

59 SSY 双导线铝设备线夹(压缩型30°)
SSY TERMINAL CONNECTOR FOR DOUBLE-BUNDLE CONDUCTOR(COMPRESSION TYPE 30°)

60 SSY 双导线铝设备线夹(压缩型90°)
SSY TERMINAL CONNECTOR FOR DOUBLE-BUNDLE CONDUCTOR(COMPRESSION TYPE 90°)

61 SYS 双导线铝设备线夹(压缩型、螺栓型)
SYS COPPER-ALUMINNIUM TRANSITION TERMINAL CONNECTING CLAMP

62 SSYG双导线压缩型铜铝过渡设备线夹(钎焊)
SSYG TERMINAL CONNECTOR FOR DOUBLE-BUNDLE CONDUCTOR(COMPRESSION)

63 双导线铜铝过渡设备线夹(压缩型0° 、钎焊)
ALUMINNIUM-COPPER TERMINAL CONNECTOR FOR DOUBLE-BUNDLE CONDUCTOR(COMPERESSION TYPE 0°)

64 双导线铜铝过渡设备线夹(压缩型30° 、钎焊)
ALUMINNIUM-COPPER TERMINAL CONNECTOR FOR DOUBLE-BUNDLE CONDUCTOR(COMPERESSION TYPE 30°)

65 双导线铜铝过渡设备线夹(压缩型90° 、钎焊)
ALUMINNIUM-COPPER TERMINAL CONNECTOR FOR DOUBLE-BUNDLE CONDUCTOR(COMPERESSION TYPE 90°)

66 铜铝过渡板母线伸缩节

67 MG铜铝过渡板(闪光焊)
MG COPPER TO ALUMINIUM ADAPTER BOARD

67 MG铜铝过渡板(钎焊)
MG COPPER TO ALUMINIUM ADAPTER BOARD

68 MS 铝母线伸缩节(母线与母线连接)
MS ALUMINIUM POWER SHUNTS (BUS-BARS CONNECT WITH EACH OTHERS)

68 MSS 铜铝母线伸缩节(母线与母线连接)
MSS COPPER-ALUMINIUM POWER SHUNTS (BUS-BARS CONNECT WITH EACH OTHERS)

69 MST铜母线伸缩节
MST COPPER POWER SHUNTS

69 MGS 型铝管母线伸缩节
FLEXIBLE STUD CONNECTORS(TYPE MGS)

70 MSC型铜铝槽型母线伸缩节
CHANNEL BUS-BAR FLEXIBLE STUD CONNECTORS(TYPE MSC)

70 MGS 型管母线伸缩节
TUBLAR BUS-BAR EXPANSION JOINT(TYPE MGS)

71 MSZD 型支撑式管母线单伸缩线夹
SINGLE EXPANSION CLAMP FOR TUBLAR BUS-BAR(TYPE MSZD)

71 MGGD 型管母线伸缩线夹
EXPANSION CLAMP FOR TUBLAR BUS-BAR(TYPE MGGD)

72 T型线夹

73 T型线夹(TL TY)型
T-CONNECTOR(TL TY)

73 TY2型线夹(液压型)
TY2-CONNECTORS

74 TY型线夹
TYCONNECTO

75 TYS双导线T型线夹(液压型)
TYSDOUBLE CONDUCTOR CONNECTORS

75 TLY型线夹(螺栓型引流液压)
TLY CONNECTORS

76 TYG型线夹
TYG CONNECTO

76 T型线夹(螺栓型)
T-CONNECTORS(BOLT TYPE)

77 TL双导线T型线夹(螺栓型)
TL DOUBLE CONDUCTOR CONNECTORS(BOLT TYPE)

78 接续金具

79 CCA 型铜接线夹
CCA COPPER CONNECTION CLAMP

79 CCT 型铜接线夹
CCT COPPER CONNECTION CLAMP

80 JB型铝并沟线夹
JB SERIES ALUMINUM PARALLEL-GROOVE CLAMP

80 JBT 型铜并沟线夹
JBT SERIES COPPER PARALLEL-GROOVE CLAMP

80 JB-TL型铜并沟线夹
JB-TL SERIES COPPER PARALLEL-GROOVE CLAMP

81 CAPG型铜铝并沟线夹
CAPG COPPER-ALUMINIUM PG CLAMP

81 APG型铜铝并沟线夹
APG COPPER-ALUMINIUM PG CLAMP

81 JAPG型铝并沟线夹
JAPG ALUMINIUM PG CLAMP

82 JLL 铝双线夹引进铜、引进T/J铜螺栓线夹
JLL SERIES ALUMINUM PARALLEL-GROOVE CLAMP

83 JY型接续管(钢绞线用、液压对接)
SPLICING SLEEVES (FOR STEEL STRAND AND HYDRAUUC COMPRESSION OVERLAP JOINT)

Pengyou
Pengyou power fitting

目 录
CONTENTS

83 JBD型接续管(钢绞线用、爆压搭接)
SPLICING SLEEVES (FOR STEEL STRAND AND EXPLOSIVE OVERLAP JION)

84 JY型接续管(铝绞线用、液压)
SPLICING SLEEVES (FOR STEEL STRAND HYDRAULIC COMPRESSIONJNDING CONNECTOR(1kV)

84 JY型架空绝缘线用接线管
SPLICING SLEEVES FOR OVERHEAD INSULATION LINE

85 JY型铝包钢绞线用接续管(液压型)
SPLICING SLEEVES FOR ACSR (HYDRAULIC COMPRESSION)

85 JY JYD型铝包钢芯绞线用接续管(液压型)
SPLICING SLEEVES FOR ACSR (HYDRAULIC COMPRESSION TYPE)

86 JYB型接续管(钢芯铝绞线用、爆压搭接)
SPLICING SLEEVES (FOR ACSR AND EXPLOSIVE OVERLAP JOINT)

86 接续管(良导体地线用、液压)
SPLICING SLEEVES (FOR GOOD CONDUCTOR GROUND WIRE AND HYDRAULIC COMPRESSION)

87 JT型接续管(铝绞线用、钳压)
SPLICING SLEEVES (FOR ALUMINUM STRAND AND ALAMP COMPRESSION)

87 JX型补修管(钢绞线用)
REPAIR SLEEVES (FOR STEEL STRAND)

88 JT型接续管(钢芯铝绞线用、钳压)
SPLICINS SLEEVES (FOR ACSR CLAMP TYPE)

89 JTB型接续管(钢芯铝绞线用、钳压)
SPLICINS SLEEVES (FOR ACSR AND EXPLOSIVE COMPRESSIM)

90 JYD型接续管(钢芯铝绞线用、钳压)
SPLICINS SLEEVES (FOR ACSR HYDRAULIC OVERLAP JOINT)

91 JX型补修管(钢芯铝绞线用)
REPAIR SLEEVES (FOR ACSR)

92 JBG型并沟线夹
JBG PARALLEL-GROOVE CLAMP

92 JBB型并沟线夹(钢绞线用)
JBB SERIES PARALLEL GROOVE CLAMP (FOR STEEL STRAND)

93 JB型铝并沟线夹(耐热铝合金导线用)
RARELLEL-GROORE CLAMP (FOR HEAT-PROOF ALUMINIUM ALLOY CONDUCTOR)

93 JYT型跳线线夹
JUNPER CONDUCTOR CLAMP

D 电站金具
POWERSTATION FITTING 94-110

95 MNP户内一片矩形母线固定金具(平放式)
MNP INDOOR SUPPORT FITTING FOR SIGLE PIECE BAR (HOUIZONTAL SETTING)

95 MNP户内二片矩形母线固定金具(平放式)
MNP INDOOR SUPPORT FITTING FOR TWO PIECE BAR (HOUIZONTAL SETTING)

96 MNP户内三片矩形母线固定金具(平放式)
MNP INDOOR SUPPORT FITTING FOR THREE PIECE BAR (HOUIZONTAL SETTING)

96 MNP户内四片矩形母线固定金具(平放式)
MNP INDOOR SUPPORT FITTING FOR FOUR PIECE BAR (HOUIZONTAL SETTING)

97 MWP 户外一片矩形母线固定金具(平放式)
MWP OUTDOOR SUPORT FITTING FOR SINGLE PIECE BAR (HOUIZONTAL SETTING)

97 MWP 户外二片矩形母线固定金具(平放式)
MWP OUTDOOR SUPORT FITTING FOR TWO PIECE BAR(HOUIZONTAL SETTING)

98 MWP 户外三片矩形母线固定金具(平放式)
MWP OUTDOOR SUPORT FITTING FOR THREE PIECE BAR(HOUIZONTAL SETTING)

98 MWP 户外四片矩形母线固定金具(平放式)
MWP OUTDOOR SUPORT FITTING FOR FOUR PIECE BAR(HOUIZONTAL SETTING)

99 MNL 户外一片矩形母线固定金具(立放式)
MNL INDOOR SUPPORT FITTING FOR SINGLE PIECE BAR (VERTICAL SETTING)

99 MNL 户外二片矩形母线固定金具(立放式)
MNL INDOOR SUPPORT FITTING FOR TWO PIECE BAR (VERTICAL SETTING)

99 MNL 户外三片矩形母线固定金具(立放式)
MNL INDOOR SUPPORT FITTING FOR THREE PIECE BAR (VERTICAL SETTING)

100 MWL 户外一片矩形母线固定金具(立放式)
MWL OUTDOOR SUPPORT FITTING FOR SINGLE PIECE BAR (VERTICAL SETTING)

100 MWL 户外二片矩形母线固定金具(立放式)
MWL OUTDOOR SUPPORT FITTING FOR TWO PIECE BAR (VERTICAL SETTING)

100 MWL 户外三片矩形母线固定金具(立放式)
MWL OUTDOOR SUPPORT FITTING FOR THREE PIECE BAR (VERTICAL SETTING)

101 MJG 矩形母线间隔垫
MJG RECTANGULAR BUS-BAR SEPARATOR

101 MCG 槽型母线间隔垫
MCG WEPARATORS FOR CHANNEL BAR

102 MCD 槽形母线吊挂金具
MCD HANGING SUPPORT FITTING FOR CHANNEL BAR

102 MCN 槽形母线户内固定金具
MCN INDOOR SURPORT FITTING FOR CHANNEL BAR

103 MCW 槽形户外固定金具
MCW OUTDOOR SUPPORT FITTING FOR CHANNEL BAR

103 MGG 固定金具
MGG SEPARATORS FOR CHANNEL BAR

104 MGJ 支架
MGJ BRACKET

104 MDG 单母线
MDG SUPPORTS FOR SINGLE-BAR

105 YH 组合圆环
YH RING SUPPORTS FOR BUNDLE CONDUCTORS

105 MSG 双母线
MSG SUPPORTS FOR DOUBLE-BAR

106 MGGH 活动式固定金具
MGGH MOVBLE SUPPORT FITTING

106 MGD 端部固定金具
MGD SUPPORTS FITTING

107 MGZ 管形母线终端球
MGZ END-CAPS FOR TUBULAR BAR

107 MGF 管形母线封头
MGF END-CAPS FOR TUBULAR BAR

108 MG0° 双T型线夹
0° DUBLE T-CONNRCTROS

109 MG30° 双T型线夹
30° DUBLE T-CONNRCTROS

109 MG90° 双T型线夹
90° DUBLE T-CONNRCTROS

110 管母线T型线夹(A类)
TUBING BUS-BAR T-CONNRCTROS

110 管母线T型线夹
TUBING BUS-BAR T-CONNRCTROS

E 线路金具
CIROUIT FITTING 111-189

111 悬垂线夹

112 XGU悬垂线夹(带碗头挂板)
SUSPENSION CLAMPS (WITH SOCKET-CLEVIS)

Pengyou
Pengyou power fitting

目 录
CONTENTS

112	XGU悬垂线夹(带U型挂板) SUSPENSION CLAMPS(WITH CLEVIS)
113	XGU可锻铸铁悬垂线夹 MALLEABLE CAST-IRON CUSPENSION CLAMPS
113	XGU悬垂线夹(防磨型) SUSPENSION CLAMPS(ABRASION-PROOF TYPE)
114	XFZ悬垂线夹 SUSPENSION CLAMPS
114	XGJ悬垂线夹(加强型) SUSPENSION CLAMPS(STRENGTHRNED TYPE)
115	XGJ悬垂线夹(提包式) SUSPENSION CLAMPS(ENVELOPE)
115	XGF–X悬垂线夹(上扛式) SUSPENSION CLAMPS
116	XGF-X悬垂线夹(下垂式) SUSPENSION CLAMPS
116	XGF-5X/GH悬垂线夹 SUSPENSION CLAMPS
117	XGF-9X/GH悬垂线夹 SUSPENSION CLAMPS
117	XGF悬垂线夹(提包式) SUSPENSION CLAMPS(ENVELOPE TYPE)
118	XGF悬垂线夹 SUSPENSION CLAMPS
118	CGH悬垂线夹(铝合金、提包式) SUSPENSION CLAMPS(ALUMINIUM-ALLOY,ENVELOPE TYPE)
119	XGH悬垂线夹 SUSPENSION CLAMPS
119	XBJ加强型悬垂线夹(提包式) STRENGTHENED SUSPENSION CLAMPS(ENVELOPE TYPE)
120	XGT改进型悬垂线夹(提包式) SUSPENSION CLAMPS(ENVELOPE TYPE)
120	XGS悬垂线夹(双线夹垂直排列) SUSPENSION CLAMPS FOR TWIN CONDUCTORS
121	XFX悬垂线夹(上扛式) SUSPENSION CLAMPS(CARRIED-UP TYPE)
121	XF悬垂线夹 SUSPENSION CLAMPS
122	XT4四分裂悬垂线夹(跳线用) SUSPENSION CLAMPS FOR QUAD-BUNDLE CONDUCTORS(FOR JUMRER CONFUCTOR)
123	**耐张线夹**
124	NLL系列输电用螺栓型铝合金耐张线夹 NLL SERES POWER DISTFIBUTION USES BOLTTYPE ALUMNIUM ALLOY STRAIN CLAMP
125	NLD可锻铸铁耐张线夹 SUSPENSION CLAMPS
125	XY钢绞线用耐张线夹(压缩型) STRAIN CLAMPS FOR STEEL WIRE(COMPRESSION TYPE)
126	NYG钢锚锻制耐张线夹(液压型) STRAIN CLAMPS (HYDRAULIC COMPRESSION)
127	NY耐张线夹 STRAIN CLAMPS (HYDRAULIC COMPRESSION TYPE)
128	NB耐张线夹(爆压型) STRAIN CLAMPS (HYDRAULIC COMPRESSION TYPE)
129	NY型耐张线夹(液压型) STRAIN CLAMPS (HYDRAULIC COMPRESSION TYPE)
129	NY型铝包钢芯铝绞线用耐张线夹(液压型) STRAIN CLAMPS ALUMINIUM URAPPING STEEL/IRON ALUMINIUM(HYDRAULIC COMPRESSION TYPE)
130	NY型铝包钢芯铝绞线用耐张线夹(液压型) STRAIN CLAMPS ALUMINIUM URAPPING STEEL/IRON ALUMINIUM(HYDRAULIC COMPRESSION TYPE)
130	NY型耐热铝合金绞线用耐张线夹(液压型) STAIN CLAMP FOR HEAT-PROOF ALUMINUM ALLOY WIRE
131	NY型耐热铝合金绞线用耐张线夹(液压型) STAIN CLAMPS FOR HEAT-PROOF ALUMINUM ALLOY WIRE
131	NY型钢芯铝合金绞线用耐张线夹(液压型) STAIN CLAMPS FOR STEEL CORE ALUMINUM ALLOY WIRE
132	**联结金具**
133	Q、QP型球头挂环 Q、QP TYPE BALL-EYES
133	QH型球头挂环 QH TYPE BALL-EYES
134	Q型球头挂环(环孔平行型) Q TYPE BALL-ELYE(COLLAR PORE PARALLEL TYPE)
134	Q型球头挂环(环孔垂直型) Q TYPE BALL-ELYE(COLLAR PORE VERTICAL TYPE)
135	Q型球头挂板 Q TYPE BALL-CLEVIES
135	Q型球头 Q-BALL
136	QG型球头钩 QG TYPE BALL-HOOK
136	W型球头挂环 W TYPE BALL-CLEVIES
137	球头挂板(带孔W型) BALL-CLEVIES(W TYPE WITH EYE)
137	球头挂板(带孔W型) BALL-CLEVIES(W TYPE WITH EYE)
138	WS型碗头挂板 WS TYPE SOCKET-CLEVIES EYES
138	球头挂环(加长WS型) BALL-CLEVIES(W TYPE FOR LENGTHENING)
139	U型挂环 U TYPE SHACKLES
140	加强型U型挂环 STRENGTH TYPE SHACKLES
140	ZH型挂环 ZH TYPE SHACKLES
141	PH型延长环(环体焊接) PH TYPE CHAIN LINKS(ANNULUS WELDING)
141	PH型延长环(环体整锻) PH TYPE CHAIN LINKS(ANNULUS MONOBLOC ROGING)
142	YL型拉杆 YL TYPE ANCHOR STRUT
142	YLP型拉杆 YLP TYPE ANCHOR STRUT
143	Z型挂板 Z TYPE CLEVIES
143	ZS型挂板 ZS TYPE CLEVIES
144	PS型挂板 PS TYPE CLEVIES

Pengyou
Pengyou power fitting

目 录
CONTENTS

144	PS型挂板 PS TYPE CLEVIES
145	P型挂板 P TYPE CLEVIES
146	UB型挂板 UB TYPE CLEVIES
146	US型挂板 US TYPE CLEVIES
147	V.VD型挂板 V.VDTYPE CLEVIES
147	NPT型联塔联板 NPT TYPE JOINT YOKE PLATE
148	NPT型联塔联板 NPT TYPE JOINT YOKE PLATE
148	NPTS型联塔联板 NPTS TYPE JOINT YOKE PLATE
149	NPTS型联塔联板 NPTS TYPE JOINT YOKE PLATE
149	UB型联塔挂板 UB TYPE JOINT YOKE PLATE
150	LT、EB型联塔挂板 LT、EB TYPE JOINT CLEVIES
150	QY型牵引板 QY DRAWING PLATE
151	DB型调整板 DB TYPE ADJUSTING PLATE
151	PT型调整板 PT TYPE ADJUSTING PLATE
152	L型联板 L TYPE YOKE PLATE
154	LF型联板 LF TYPE YOKE PLATE
155	LJ型联板 LJ TYPE YOKE PLATE
156	LS型联板 LS TYPE YOKE PLATE
156	LL型联板 LL TYPE YOKE PLATE
157	LK型联板 LK TYPE YOKE PLATE
157	KL型联板 KL TYPE YOKE PLATE
158	LX型联板 LX TYPE YOKE PLATE
158	LXV型联板 LXV TYPE YOKE PLATE
159	SP型调平联板 SP TYPE LEVELING FLAT YOKE PLATE
160	LTP型调平联板 LTP TYPE LEVELING FLAT YOKE PLATE
160	BD型避雷线垂直尽架 LIGHTNING CONDUCTOR SUSPENSION HANGER
161	ZCJ型支撑架 ZCJ TYPE SUPPORT
161	UUJ型螺丝 UUJ TYPE BOLT
162	FYB YJB型预绞丝补修条 PERFORMED REPAIR ARMOR
163	QPZ球型避雷针 JDB接地棒、夹 QPZ BALL TYPE LIGHTINGROD, JDB EARTH ROD,CLAMP
165	FD型防振锤 DAMPERS
166	FF型防振锤(500kV 线路用) DAMPERS (500kV LINE)
166	FR型防振锤 DAMPERS
167	FDZ型防振(500kV 线路用) DAMPERS FOR 500kV LINE
168	FJQ型间隔棒 SPACER
168	间隔棒(FJZ型双导线用) SPACER (FJZ DOUBLE CONDUCTORS)
169	FFJQ型间隔棒 SPACER
170	TJ型间隔棒(500kV跳线用) SPACER (500kV JUMPER CONDCTOR)
170	JX型间隔棒(三分裂导线用) SPACER (THEREE-BUNDLE CONDCTOR)
171	FJZ型间隔棒(三分裂导线用) SPACER (THREE-BUNDLE CONFDUCTORS)
171	FJY型间隔棒(跳线用) SPACER (JUMPER CONDCTOR)
172	FJX型预绞丝阻尼间隔棒 SPACER CLAMPER FOR PERFORMED
172	FJZ-F型方框型阻尼间隔棒 SQUARE FRAME TYPE SPACER-DAMPERS
173	JX型圆环型阻尼间隔棒 DAMPERS
173	FJY型圆环型阻尼间隔棒 CIRCULAR RING TYPE SPACER-DAMPERS
174	FJZ型十字型阻尼间隔棒 CROSS SPACER-DAMPERS
174	FJS型十字型阻尼间隔棒 CROSS SPACER-DAMPERS
175	预绞丝护线条 PERFORMED ARMOUR
176	铝包带 ALUMINIUM ARMOR TAPE
176	悬重锤及其附件 COUNTER WEIGHT AND ACCESSORY
177	ZC型锤片 COUNTER WEIGHT PIECES
178	ZC型重锤片 COUNTER WEIGHT PIECES
178	均压屏蔽环(500kV线路用) GRADING AND SHIELDING RING (500kV LINE)
181	均压屏蔽环(500kV线路用) GRADING AND SHIELDING RING(300kV LINE)
182	NX型楔型线夹 WEDGE TYPE CONNECTOR
182	NUT型线夹(可调式) NUT TYPE CONNECTOR (ADJUSTABLE)

Pengyou
Pengyou power fitting

目 录
CONTENTS

183	NU型线夹(不可调式) NU CONNECTOR (NO-ADJUSTING)
183	UL型挂环 UL TYPE HACKLES
184	JK型钢线卡子 JK TYPE STEEL WIRE CLIP
184	LV型双拉线用联板 LV TYPE TOKE PLATE FOR DOUBLE STAY
185	PD型挂板 PD TYPE CLEVIES
185	压接式NLY型线夹(可调式) COMPRESSION JOINT-NLY TYPE CONNECTOR(ADJUSTABLE)
186	钢芯铝绞线(LGJ、LGJF)的结构与技术指标GB1179-83 STRUCTURE AND TECHNICAL INDEX FOR ACSR (LGJ, LGJF)
187	镀锌钢绞线的结构与技术指标 YB/T5004-2001 STRUCTURE AND TECHNICAL INDEX FOR GALVANIZED STEEL STRAND
188	镀锌钢绞线(GJ)的结构与技术指标GB1200-75 STRUCTURE AND TECHNICAL INDEX FOR GALVANIZED STEEL STRAND (GJ)
189	LHBGJF1、LHBGJF2、LHBGJ钢芯热处理铝镁硅稀土合金绞线的结构与技术指标 STRUCTURE AND TECHNICAL INDEX FOR STRUCTURE AND TECHNICAL INDEX FOR STEEL CORE HEAT TREAT FOR AL MG SI ALLOY STRAND
190	绝缘架空金具 AERIAL INSULATION CONDUCTOR FITTING
218	电缆附件 POWER CABLE ACCESSORIES
249	施工工具 POWER LINE TOOLS

A 架空绝缘金具
Aerial insulation conductor fitting

现代化社会中，对电网供电的安全性要求也越来越高，尤其是城网的要求更高。因此，城网电线路以绝缘电缆导线代替裸线是采用的有效措施之一。同时，对金具也应采取对应的措施，使金具有绝缘功能的方法有两中，一是应用绝缘材料，设计新的具有绝缘功能的具有。二是为金具设计绝缘罩达到绝缘效果。

In modern society, the power gird security requirements have become more sophisticated, particularly in the city demandingnetworks.Therefore, the urban network power lines to guide red insulated cables Bare wire is used instead of effective measures. Meanwhile,gold shouldbe taken with thecorrespondingmeasures to make gold with the insulating function of two ways,one application of insulating materials, the design ofnew featuresthat haveinsulated fittings.Second, the design for the gold with insulating cover to achieve insulation effect .

穿刺线夹性能、特点 Function and Features

JJC系列穿刺线夹主要适用于架空绝缘导线的接续、分支连接和接地保护，适用电压等级为10kV和1kV及以下，其主要性能和特点：

(一)安装简便。安装时无需剥去导线的绝缘层，只要按规定位置在线夹中放入主线和支线，用套筒扳手均匀拧断力矩螺母即可；

(二)接触电阻小，线夹温升低。特制力矩螺栓确保恒定的穿刺压力，使线夹与导线达到良好的电气接触而不过分损伤导线，保证架空绝缘导线的正常使用寿命；

(三)结构密封、绝缘性高。线夹内部采用绝缘导热油脂填充，安装后整个导体形成全封闭结构，提高了绝缘强度和安全性；

(四)线夹适用范围广。可适用于铜铝导线、异径导线的支接、等径导线的对接，并适用于铜铝绝缘导线的过渡连接。

注：1. 使用穿刺线夹的导线必须符合国家标准；

2. 穿刺线夹的安装人员必须完全熟悉安装技术；

3. 在带电作业时，请戴上绝缘手套和绝缘套筒扳手；

4穿刺线夹属一次性线夹，由于牙型变形拆卸后请勿重复使用。

JJC insulation piercing connectors are mainly used for the connection, branch connection and grounding protection for 10 kV and 1kV or down to 1kV.

1. Simple installation. Put the main wire and the branch wire directly on the right places. Screw the nut tightly with the insulating gloves and spanners.

2. Low resistance and heat uneasily. The special bolts can control the connectors invariably for superior electric connection and less wire spoilage, the normal service life of the stilt insulating wires

3. Sealing structure and good insulation. The connectors are filled with insulating oil. As a result, the sealing structure conductor can increase the insulating intensity and safety.

4. Wide range of applications. They are applicable for the branch connection of copper aluminum wires or of inequality-diameter wires, the direct connection of equality-diameter wire sand the transit connection of the copper aluminum wires.

Remark:

1. The conductors for the cable connectors must be in national standard.
2. The workers must be extremely professional in their work.
3. Please put on the insulating gloves and use the insulating spanners.
4. Don't use it again after dismantlement due to its non-renewable character.

穿刺线夹命名方式 Insulation piercing connector naming way

JJC□□-□□□/□□□

- 支线适用最大的导线截面 Max section of branch line
- 主线适用最大的导线截面 Max section of main cable
- 适用电压 Application Voltage
- 穿刺 Piercing
- 绝缘 Insulation
- 接续金具 Connection fitting

穿刺线接地夹命名方式 Piercing grounding protection naming way

JJCF□□-□□□/□□□

- 主线适用最小的导线截面 Min section of main line
- 主线适用最大的导线截面 Max section of main cable
- 适用电压 Application Voltage
- 防护 Protection
- 穿刺 Piercing
- 绝缘 Insulation
- 接续金具 Connection fitting

Pengyou
Pengyou power fitting
穿刺线夹性能、特点和命名方式
PERFORMANCE, CHARACTERISTICS AND NAMING OF INSULATION PIERCING CONNECTOR

安装图例 Example

合理选型，把调整平直的导线放入线夹的正确位置后先用手拧紧

Choose the right size connector to fit. Put the straight wires in the right places then screw them tightly by hand.

用绝缘套筒扳手均匀拧紧力矩螺母

Tighten the nuts equally with the insulating gloves and spanner.

直至拧断力矩螺母即可

Don't stop screwing until the cap of the moment nut is screwed off.

穿刺效果图 Photo of Thrusting result

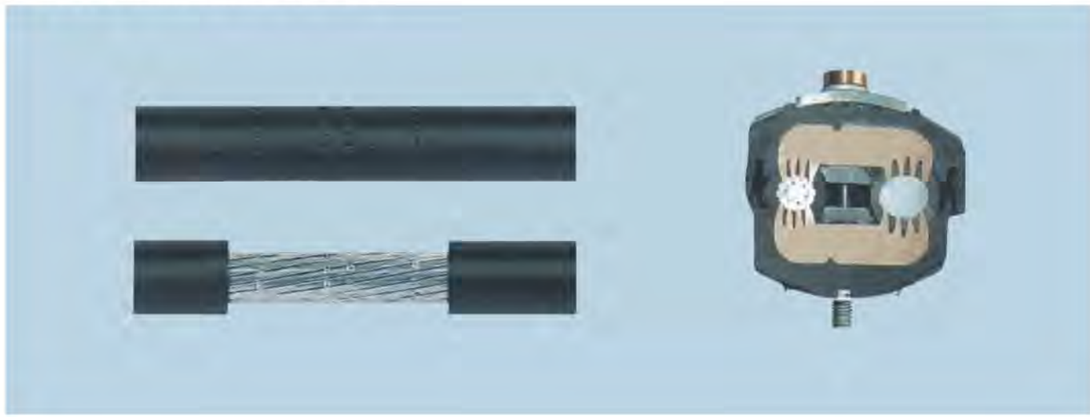

适用范围 Application

适用于1kV及以下架空绝缘导线的支接和接续；
适用于路灯系统的电缆连接。
Application to 1kV (or < 1kV) overhead electricity distribution systems,
Application to street lighting systems.

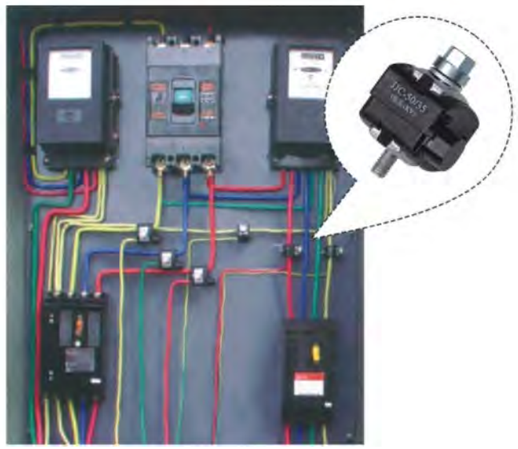

Pengyou
Pengyou power fitting
JJC型穿刺线夹(1kV)
JJC TYPE PIERCING CONNECTOR(1kV)

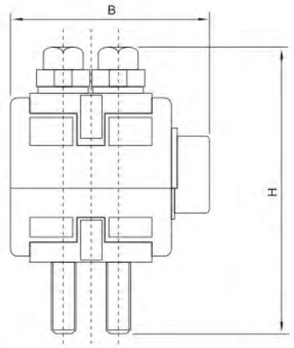

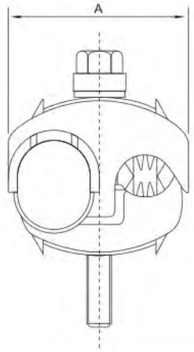

型号 Type	适用导线(mm²) Applicable conductor		主要尺寸 Dimensions(mm)			标称电流 Nominal current (A)	螺栓数量(枚) Bolt number	主要应用 Mainly application
	主线 Main line	支线 Branch line	A	B	H			
JJC-240/240	95~240	95~240	85.5	85.3	111	476	2	主线路的连续，主线路与用户的户外分支连接，注线路与电气设备的连接和路灯的连接。The connection of main circuities, the connection of main circuitry and outdoor branch circuitry, the con-nections of main circuitry and electricap-plicance and streetlamps.
JJC-240/185	95~240	70~185	75.5	85.3	111	399	2	
JJC-185/95	70~185	16~95	74.5	80.8	111	257	2	
JJC-150/150	35~150	35~150	58.6	65.6	86	342	2	
JJC-95/50	25~95	6~50	52.6	46.7	71.2	162	1	
JJC-50/35	16~50	4~35	42.1	43.2	66.5	132	1	
JJC-95/6	25~95	1.5~6	31.7	35.2	51.7	55	1	
JJC-50/10	10~50	1.4~10	30.6	32.1	42.6	75	1	

JJC10型穿刺线夹(10kV)
JJC10 TYPE PIERCING CONNECTOR(10kV)

适用范围 Application

适用于10kV架空绝缘导线的支接和接续。

Application to 10kV overhead electricity distribution systems.

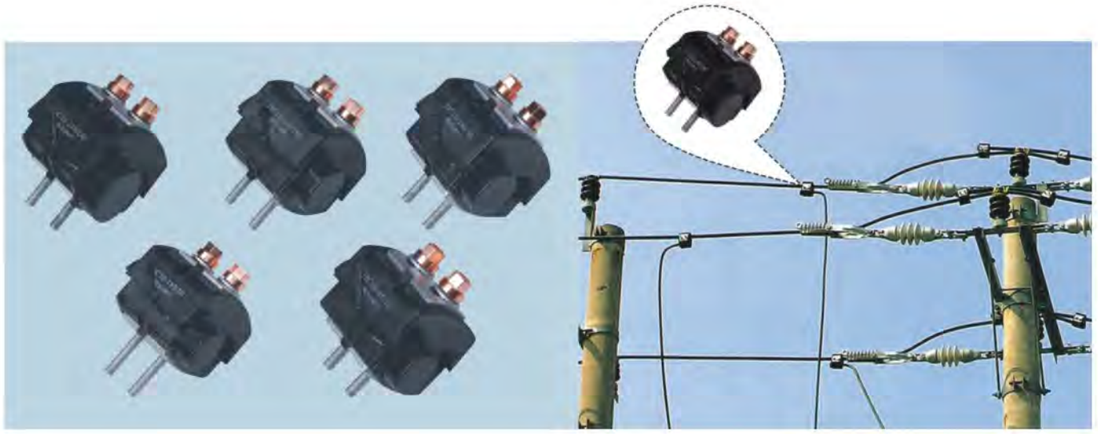

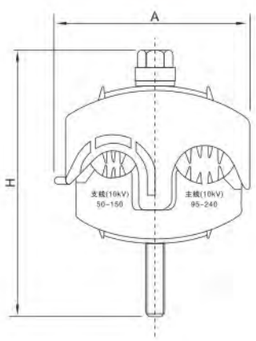

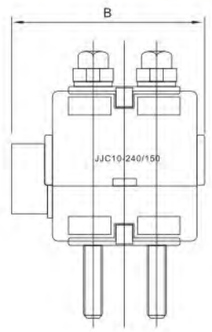

型号 Type	适用导线(mm²) Applicable conductor		主要尺寸 Dimensions(mm)			标称电流 Nominal current (A)	螺栓数量(枚) Bolt number	主要应用 Mainly application
	主线 Main line	支线 Branch line	A	B	H			
JJC10-240/240	95~240	95~240	85.5	85.3	111	476	2	主线路的连续，主线路与分支线连接。The connection of main circuities, the connection of main circuitry and branch circuitry.
JJC10-240/150	95~240	50~150	80.5	82	111	342	2	
JJC10-185/50	95~185	16~50	74.5	80.8	111	162	2	
JJC-95/70	25~95	16~70	64.5	82	95.8	207	2	

JJCL异型穿刺线夹(1kV)
JJCL NON-CONVENTIONAL PIERCING CONNECTOR(1kV)

适用范围 Application

适用于1kV及以下的导线与三芯或四芯绝缘电缆的分支连接；

适用于截面扇型角度为90° ~120° 的绝缘电缆。

Application to 1kV and less than 1kV electricity distribution systems(3-core or 4-core insulation cable).

Application to insulation cable with a section sector angle from 90° to 120° ..

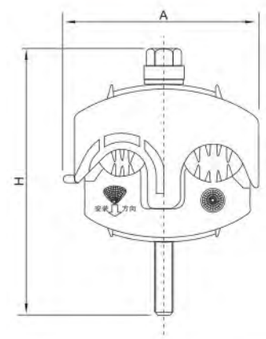

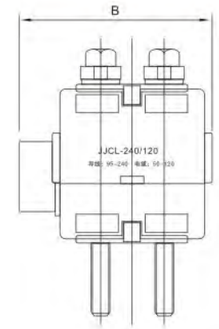

型号 Type	适用导线(mm²) Applicable conductor		主要尺寸 Dimensions(mm)			标称电流 Nominal current (A)	螺栓数量(枚) Bolt number	主要应用 Mainly application
	主线 Main line	支线 Branch line	A	B	H			
JJCL-240/185	150~240	120~185	85.5	85.3	111	399	2	主线路与电缆分支线连接。The connection of main circuities and cablebranch.
JJCL-240/120	95~240	150~120	80.5	82	111	299	2	

JJCF型穿刺接地线夹(1kV)
JJCF TYPE PIERCING GROUNDING CONNECTOR(1kV)

适用范围 Application

适用于1kV及以下架空绝缘导线接地保护。

Application to grounding protection of 1kV (or < 1kV) overhead electricity systems.

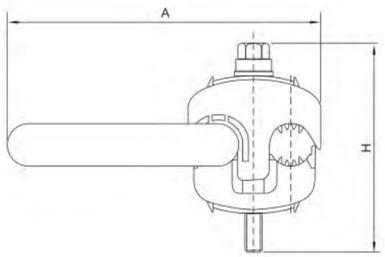

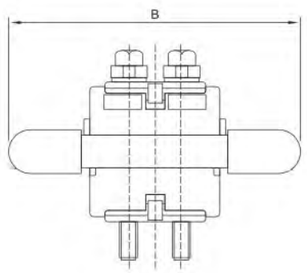

型号 Type	适用电压 Applicable voltage (KV)	适用导线 Applicable conductor (mm^2)	主要尺寸 Dimensions(mm)			标称电流 Nominal current (A)	螺栓数量(枚) Bolt number	主要应用 Mainly application
			A	B	H			
JJCF-240/150	1	150~240	162	138.4	111	476	2	电力施工时主线路的安全接地保护。 The grounded safety protection of maincircuitry when electric power construction.
JJCF-185/95	1	95~185	157.3	138.4	111	476	2	
JJCF-120/35	1	35~120	153	105	85.8	299	2	

JJCF10型穿刺接地线夹(10kV)
JJCF10 TYPE PIERCING GROUNDING CONNECTOR(10kV)

适用范围 Application

适用于10kV架空绝缘接导线接地保护。

Application to grounding protection of 10kV overhead electricity systems.

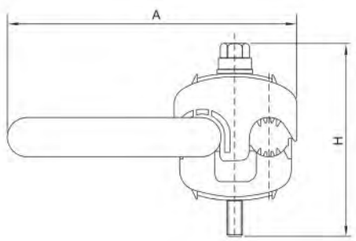

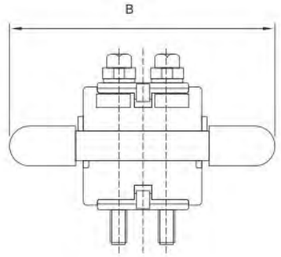

型号 Type	适用电压 Applicable voltage (KV)	适用导线 Applicable conductor (mm^2)	主要尺寸 Dimensions(mm)			标称电流 Nominal current (A)	螺栓数量(枚) Bolt number	主要应用 Mainly application
			A	B	H			
JJCF10-240/150	10	150~240	162	138.4	111	476	2	电力施工时主线路的安全接地保护。 The grounded safety protection of maincircuitry when electric power construction.
JJCF10-185/95	10	95~185	157.3	138.4	111	476	2	
JJCF10-95/25	10	25~95	149	138.4	95.8	257	2	

JJCF10型穿刺接地线夹(10kV)
JJCF10 TYPE PIERCING GROUNDING CONNECTOR(10kV)

适用范围 Application

适用于10kV配变线路接地保护。

Application to grounding protection of 10kV distribution systems.

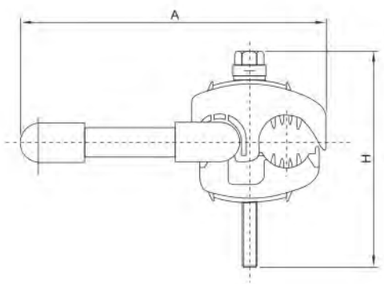

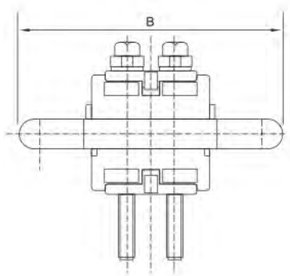

型号 Type	适用电压 Applicable voltage (KV)	适用导线 Applicable conductor (mm^2)	主要尺寸 Dimensions(mm)			标称电流 Nominal current (A)	螺栓数量(枚) Bolt number	主要应用 Mainly application
			A	B	H			
JJCF-185/95(配)	10	95~185	157.3	138.4	111	476	2	电力施工时配变线路的安全接地保护。 The grounded safety protection of maincircuitry when electric power construction.
JJCF-95/25(配)	10	25~95	149	138.4	95.8	257	2	

FHJ10系列穿刺型防弧线夹性能、特点和命名方式
PERFORMANCE, CHARACTERISTICS AND NAMING OF FHJ10 SERIES PIERCING ARC-PROTECTION CONNECTOR

性能、特点 Function and Features

(一)安装简便：无需剥去导线的绝缘层，可直接安装，恒定的力矩螺母控制拧紧力矩，保证防弧金具与导线可靠的接触，并简化了安装的难度，外加绝缘罩保护，运行安全可靠；

(二)合理设计：精确设计的雷电放电间隙，能准确定位雷电冲击放电路径，疏导工频电弧远高架空绝缘导线和绝缘子，能有效的防止雷击断线，保证架空绝缘导线的安全运行；

(三)选材合理：高压电极采用高强度铝合金，能耐受多次电弧烧灼，螺栓锁紧采用高弹性碟型垫片，使线夹具有足够穿刺力的补偿，弥补绝缘导线长期运行而发生的蠕变问题。

1. Simple installation: install directly without peeling off insulating layer, screw the control moment nut tightly to contact with the wire swell, then close it with a insulation shell to work sifaty.

2. Outstanding design: design a gap precise between hardware and arcing-plate to guide lightning passing through for separating power-fraquency from overhead insulation line, insulators and preventing from breaking of overhead insulation line by lightning stroke.

3. Outstanding material: Being made of high strength aluminium alloy, the high voltage electrodes can endure to be struck by electric arc for many times. The bolt with a high-elasticity dishing shim, support enough strength to hardware piercing, and resolves creep problem resulted from long term operating of insulating conductor.

防弧线夹命名方式 Piercing arc-protection hardware naming way

FHJ10 □ - □

- 导线截面积
- 金具安装方式：B表示剥线型
  缺省或C表示单向供电穿刺型
  S表示双向供电穿刺型
- 表示防弧金具

FHJ10系列穿刺型防弧线夹安装说明
INSTALLATION OF FHJ10 SERIES PIERCING ARC-PROTECTION CONNECTOR

安装说明 Fitting Instruction

(一)穿刺型防弧金具适用于P15、P20型绝缘子，如遇其他型号绝缘子配合使用时，应与本公司联系。不同标称截面积的绝缘导线要选择对应型号的防弧金具。产品必须安装在绝缘子的负荷侧(受电侧、非电源侧)，防弧金具的烧灼部位必须与导线平行，并且垂直放置。根据绝缘子的型号参照说明书测量防弧金具到绝缘子中心线的距离，要确保D和L的距离满足下表安装尺寸的要求，以便定位雷电闪络路径，使工频电弧烧灼时不会损伤架空绝缘导线和绝缘子。

1. The piercing Arc-protection hard ware is applied to type p15, p20 insalutors. Please contact with us if you went to use it with other type insulator. Chosed the right size of the cable section to fit the piercing Arc-protection hardware. The production must connet the cathode (negative pole, non power supply side) of insulators, the position to be struck by electric arc must be parallel to line and placed vertically. Resaonablely arrange the distance of D and L according to directions for use of insulator to set a path for lightning stdcking without damage of overhead insulation line and insulators.

安装尺寸要求 Installation requirement

绝缘子型号 Model of insulator	对应的距离D(毫米) Corresponding distance D(mm)	对应的距离L(毫米) Corresponding distance L(mm)
P15	320±10	130~150
P20	260±10	150~180

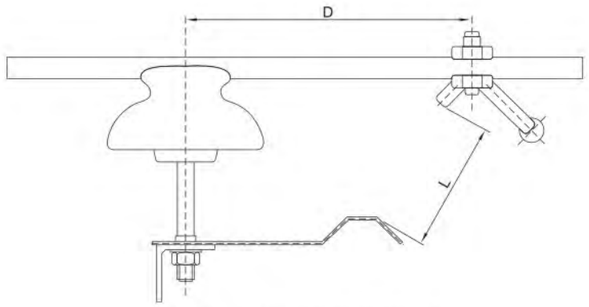

安装尺寸示意图 Schematic drawing

(二)安装防弧金具穿刺部分时，上压板和下压板必须上下平行放置，拧两枚力矩螺母的时候要均匀交替的拧，最后直至拧断力矩螺母，使用的扳手应采用封闭式的扳手(套筒扳手、梅花扳手、棘轮扳手等)，避免使用开口式的扳手(活动扳手、开口扳手等)。另外，不同型号防弧金具的锁紧力矩各不相同，所以使用时请勿擅自调换力矩螺栓。

(三)在绝缘子底部安装引弧板，根据绝缘子的型号参照说明书调整防弧金具至引弧板的距离，确保D和L的距离满足安装尺寸的要求。

(四)给防弧金具的穿刺部分套上绝缘罩，绝缘罩的扣钉和绝缘绑线要求绑扎牢靠。

2. Place the upper plate of hardware parallel to lowers when you install it, screw the torque nuts tightly, evenly and alternately, don't stop screwing until the cap of nuts drops. The spanner is suggested to seal type spanner (such as box spanner, double off setring spanner, ratchet spanneretc), the opened type spanner is for bidden to use(such as adjustable wrench, open end wrench etc). While, different type arc-protection hardware, different the torque bolt, so, it is forbidden to change torque bolt without any guidance during operating.

3. Install the arcing-plate at bosom of insulator, keep the adjust distance(D and L)between arc-proteddon hardware and arcing-plate according to reference explanation of insulator.

4. Fit a insulation cover to close piercing section of arc-protection hardware, the seizing and the clasp of insulation cover must be bound firm.

Pengyou
Pengyou power fitting
FHJ10系列穿刺型防弧线夹
FHJ10 SERIES PIERCING ARC-PROTECTION CONNECTOR

适用范围 Application

适用于10kV架空绝缘导线配电网中的防雷击断线。

Application to Arc-protecting hard ware against lightning-caused breaking of insulation conductors in 10kV distribution network.

防弧金具安装图
Installation diagram of arc-protection fitting

防弧金具与避雷器组合安装图
Stack mounting diagram of arc-protection fitting and surge arrester

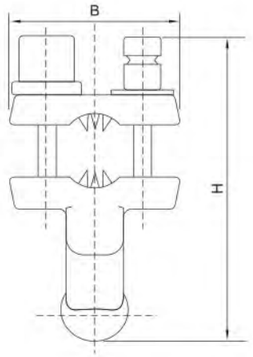

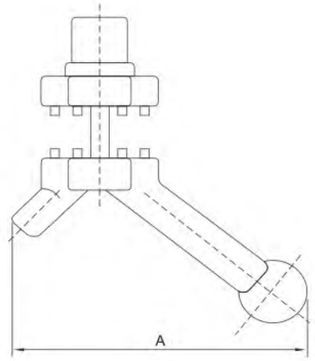

主要技术参数 Technical Data

型号 Type	适用电压 Applicable voltage (KV)	适用导线 Applicable conductor (mm^2)	主要尺寸 Dimensions(mm)		
			A	B	H
FHJ-70/120	10	70~120	128	75	132.5
FHJ-150/240	10	150~240	128	75	132.5

NES(JNF)四芯耐张线夹(锚固金具)
NES(JNF) FOUR-CORE COLLECTING STRAIN CLAMP (ANCHOR FITTINGS)

用途 Application

用于1kV及以下架空绝缘线路终端或线路耐张段两端固定、拉紧绝缘线。

For use with the end of aerial insulation lines up to 1kV, tighten up the insulation conductor.

特点 Features

本线夹为四芯并沟并槽结构，将四根绝缘导线夹入(不剥绝缘)后弄进螺栓，夹紧的四根绝缘导线便可成束状，将拉杆锚固后，便可拉紧固定。

The clamp has designed four core parallel groove, after clamping the four insulation conductor (not remove the insulation layer), tighten up the bolt till stop.

外形及安装尺寸 Dimension drawings

型号 Type	适合导线范围 Conductor section(mm²)
NES-0A	6~25
NES-1A	35~50
NES-2A	70~120
NES-0B	6~25
NES-1B	35~50
NES-2B	70~120

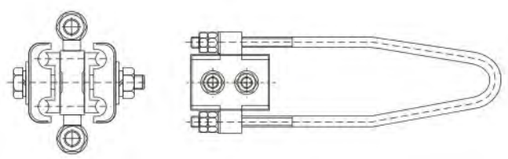

安装状态图 Installation picture

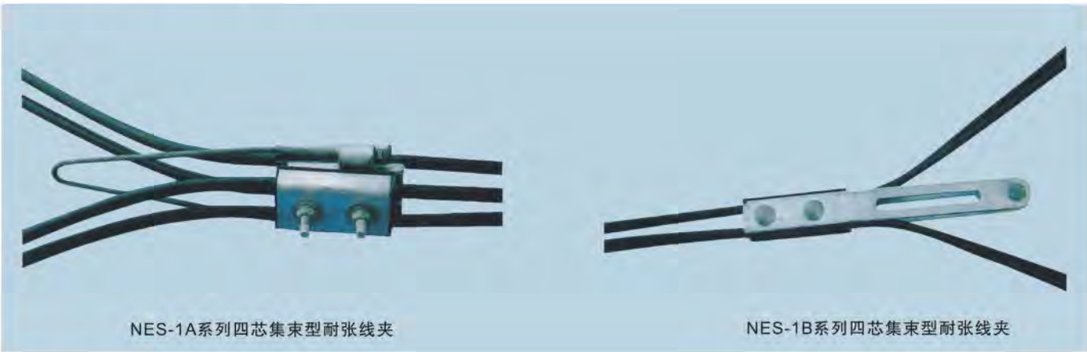

JBL JBT JB-TL系列异型并沟线夹及绝缘罩
NON CONVENTIONAL TYPE COMBINED GROOVE CABLE CLEAT AND INSULATING SHIELD

用途 Application

JBL、JBT、JB-TL系列异型并沟线夹适用于架空电线路中非承力接续与分支，与绝缘罩配套使用起防护绝缘作用。

JBL, JBT, JB-TL series non conventional type parallel groove clamp is applicable for the unendurable force splicing and branching of aerial line, it has the function of protection and insulation when it matches matches insulating sheath.

规格及技术参数 Specification

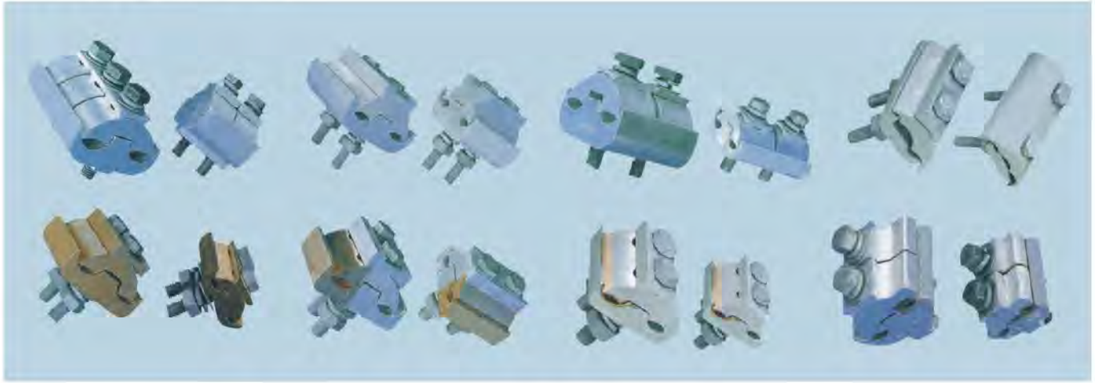

产品名称 Product of name	型号 Type	适用导线型号 Applicable lead type(mm²)
异型铜并沟线夹 non conventional type copper parallel groove clamp	JBT-16-120	16-120
	JBT-50-240	50-240
异型铝并沟线夹 non conventional type aluminum parallel groove clamp	JB-TL-16-120	16-120
	JB-TL-50-240	50-240

产品名称 Product of name	型号 Type	适用导线型号 Applicable lead type(mm²)
异型铝并沟线夹 non conventional type aluminum parallel groove clamp	JBL-16-120A	JGJ-16-120
	JBL-16-120B	
	JBL-50-240A	JGJ-50-240
	JBL-50-240B	
	JBL-120-300A	JGJ-120-300
	JBL-120-300B	

注：A型为两个螺栓、B型为三个螺栓。以上产品都配有绝缘外罩。

安装状态图 Installation picture

JCG型跨径接户线夹及绝缘罩
JCG TYPE SPAN CONNECTION USERS CLAMP AND INSULATING SHIELD

用途 Application

JCG型系列铜铝过渡跨径接户线夹适用于电力线路铝导线与进户铜导线的过渡连接，也适用于电力线路铜导线与进户铜导线的连接；以及电力线路铜导线与进户铝导线的连接。

JCG series copper-aluminum transition span connection users clamp is applicable for the transition joint between the ahtmimtmwire of electric powerline and the copper lead of the receiving usel it is also applicable for the connection between the copper lead of the electric power line and the copper lead of receiving user, and it is applicable for the connection between the copper lead of the electric power line and the aluminum lead of receiving user.

规格及技术参数 Specification

JCG系列铜铝过渡跨径进户线线夹 JCG series copper-ahtminum transition span clamp

型号 Type	适用主线截面积(mm^2) Cross sectional area of the maill conductor	适用分支截面积(mm^2) Applicable sectional area of the branch
JCG-1	16~50	4~16
JCG-2	35~150	4~25
JCG-3	25~150	4~16

安装状态图 Installation picture

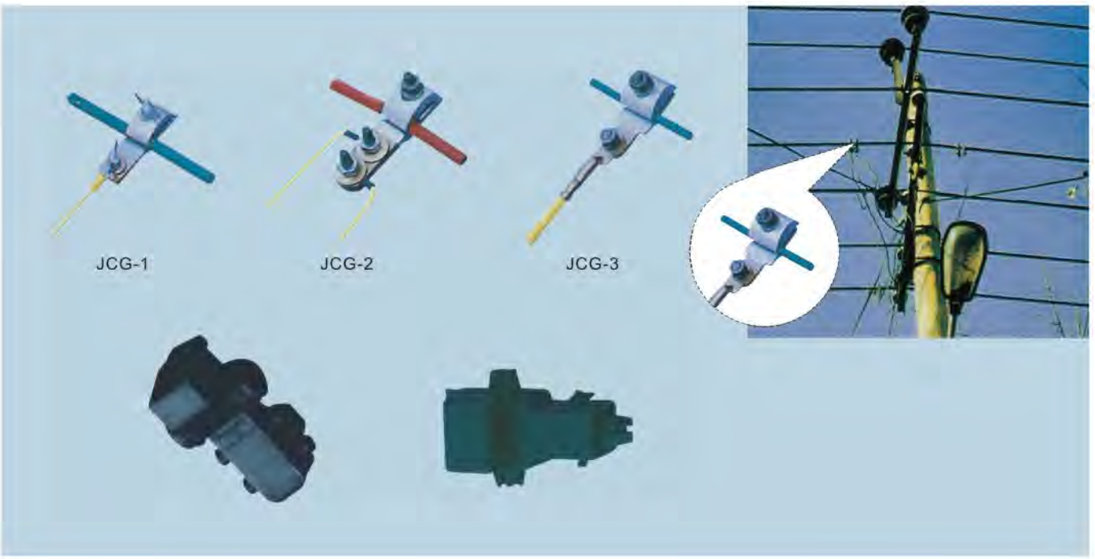

铜跨径进户线线夹 Copper span clamp

适用主线截面积(mm^2) Cross sectional area of the maill conductor	适用分支截面积(mm^2) Applicable sectional area of the branch
25~150	4~16

10kV架空绝缘线路耐张串装装置图(一)、(二)
THE RESISTIBLE TENSION SETTING DRAWING (1), (2) OF 10kV AERIAL INSULATING LINE

一、XP-4盘形悬式绝缘子耐张串 XP-4 dish shape suspension type insulator overtine resistant bunch

XP-4盘形悬式绝缘子耐张串材料表

序号 No.	名称 Name	型号规格 Type	数量 Amont
1	直角挂板	Z-7	1
2	球头挂环	QP-7	1
3	盘形悬式绝缘子	XP-4	2
4	盘形悬式绝缘子绝缘罩	PXP(Z)	1
5	双联碗头挂板	WS-7-G	1
6	碗头挂板绝缘罩	WS-7	1
7	楔型耐张线夹	NXL-(规格选用)	1
8	楔型耐张线夹绝缘罩	NXZ-(规格选用)	1
9	自粘性绝缘带	AD	适量

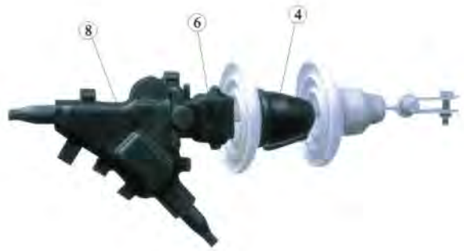

备注：1. 铜芯线路耐张线夹NXL改为NXT。
2. 0.4kV线路减少一个悬式绝缘子。
Notes: 1. The overtension resistant clamp NXL of has been changed to NXT.
2. The 0.4kV line reduces one suspension insulator.

二、52-9A改型悬式绝缘子耐张串 52-9A retrofit suspension insulator overten sidu resistant bunch

XP-4盘形悬式绝缘子耐张串材料表

序号 No.	名称 Name	型号规格 Type	数量 Amont
1	U型挂环	U-7	1
2	改型悬式绝缘子	52-9A	2
3	盘形悬式绝缘子绝缘罩	PXP(Z)	1
4	平行挂板	P-10	1
5	平行挂板绝缘罩	P(Z)-10	1
6	楔型耐张线夹	NXL-(规格选用)	1
7	楔型耐张线夹绝缘罩	NXZ-(规格选用)	1
8	自粘性绝缘带	AD	适量

备注：1. 铜芯线路耐张线夹NXL改为NXT。
2. 0.4kV线路减少一个悬式绝缘子。
Notes: 1. The overtension resistant clamp NXL of has been changed to NXT.
2. The 0.4kV line reduces one suspension insulator.

10kV架空绝缘线路耐张串装置图(三)、(四)

THE RESISTIBLE TENSION SETTING DRAWING(3), (4) OF 10KV AERIAL INSULATING LINE

三、双铁头瓷拉棒耐张串 Double ironhead porcelain pullrod over tension resistant bunch

双铁头瓷拉棒耐张串材料表
Material list of the double irorthead porcelain rod overtension resistant bunch

序号 No.	名称 Name	型号规格 Type	数量 Amont
1	U型挂环	U-7	1
2	双铁头瓷拉棒	SL-15/30	1
3	双铁头瓷拉棒绝缘罩	SLZ-15/30	1
4	楔型耐张线夹	NXL-(规格选用)	1
5	楔型耐张线夹绝缘罩	NXZ-(规格选用)	1
6	自粘性绝缘带	AD	适量

备注：1. 铜芯线路耐张线夹NXL改为NXT。
Notes: 1. The overtension resistant clamp NXL of has been changed to NXT.

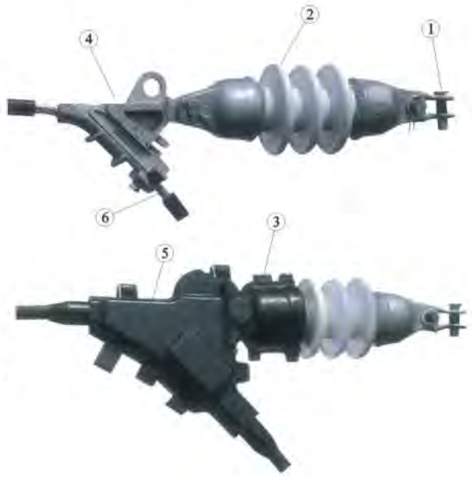

四、高原型复合绝缘子耐张串 Platean type compound insulator overtension resistant bunch

高原型复合绝缘子耐张串材料表
Material list of platean type compound insulator overtension resistant bunch

序号 No.	名称 Name	型号规格 Type	数量 Amont
1	直角挂板	Z-7	1
2	球头挂环	QP-7	1
3	高原型复合绝缘子	FXBWG-10/70	2
4	双联碗头挂板	WS-7A-G	1
5	碗头挂板绝缘罩	WSZ-7-F	1
6	楔型耐张线夹	NXL-(规格选用)	1
7	楔型耐张线夹绝缘罩	NXZ-(规格选用)	1
8	U形挂环	U-7	1
9	自粘性绝缘带	NXJ-(规格选用)	1

备注：1. 铜芯线路耐张线夹NXL改为NXT。
Notes: 1. The overtension resistant clamp NXL of has been changed to NXT.

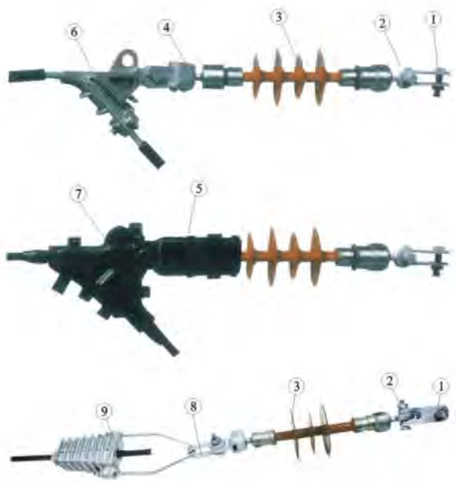

NXJ系列楔型铝合金耐张线夹

NXJ SERIES WEDGE TYPE ALUMINUM ALLOY OVER-TENSION RESISTANT CLAMP

用途 Application

NXJ系列楔型铝合金耐张线夹适用于1kV和10kV及以下架空绝缘铝芯线路(KJLYJ)的终端或耐张段两端的耐张绝缘子串上，将架空绝缘导线固定或拉紧。每种产品按导线规格分别配有不同的塑料楔芯。

NXJ series wedge type aluminum alloy overtension resistant clamp is applicable for the terminals of 1kV and 10kV (including not more than 10kV) aerial insulating aluminum core line, or it is used in the overtension resistant insulator bunch of the two terminal of overtension resistant sections. It can fix or fasten the aerial insulating lead. Every kind of product is respectively fitted with different plastic wedge core according to the norms of lead.

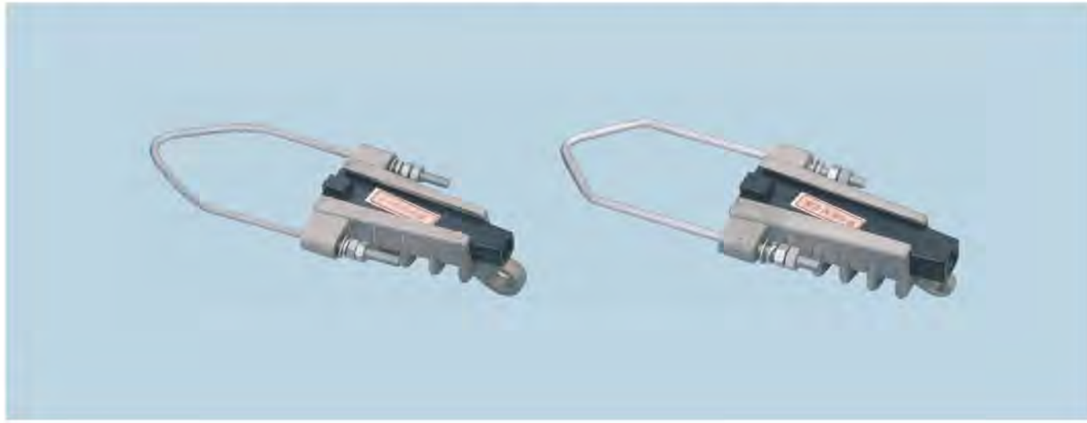

规格及技术参数 Application

NXJ-新型

型号 Type	1kV架空绝缘导线截面(mm²) Aerial insulating conductor section	架空绝缘导线外径(mm) Dia. of aerial insulating conductor	10kV架空绝缘导线截面(mm²) Aerial insulating conductor section	握着力 (kN) Holding power	破坏荷重 (kN) Rupturing power
NXJ-1	16-35	7.1-10		1.6	13.7
	50-70	11.7-13.7	16-25	2.4	
	95	14.8-16.1	35-50	4.55	
NXJ-2	120-150	17.8-19.4	70-95	8.9	21
	185	20.8-22.4	120-150	13.65	
NXJ-3	240	24-26.2	185-240	22.5	43.3
		28.4	300	28.2	

适用于架空绝缘线，不需剥绝缘层。

安装状态图 Installation picture

NXJ系列楔型铝合金耐张线夹

NXJ SERIES WEDGE TYPE ALUMINUM ALLOY OVER-TENSION RESISTANT CLAMP

用途 Application

NXJ系列楔型铝合金耐张线夹适用于1kV和10kV及以下架空绝缘铝芯线路(KJLYJ)的终端或耐张段两端的耐张绝缘子串上，将架空绝缘导线固定或拉紧。每种产品按导线规格分别配有不同的塑料楔芯。

NXJ series wedge type aluminum alloy overtension resistant clamp is applicable for the terminals of 1kV and 10kV (including not more than 10kV) aerial insulating aluminum core line, or it is used in the overtension resistant insulator bunch of the two terminal of overtension resistant sections. It can fix or fasten the aerial insulating lead. Every kind of product is respectively fitted with different plastic wedge core according to the norms of lead.

NXJJ-3

规格及技术参数 Application

NXJ-加强型

型号 Type	1kV架空绝缘导线截面(mm²) Aerial insulating conductor section	架空绝缘导线外径(mm) Dia. of aerial insulating conductor	10kV架空绝缘导线截面(mm²) Aerial insulating conductor section	握着力(kN) Holding power	破坏荷重(kN) Rupturing power
NXJ-2	120-150	17.8-19.4	70-95	8.9	21
	185	20.8-22.4	120-150	13.6	
NXJ-3	240	24-26.2	185-240	22.5	43.3
		28.4	300	28.2	

NXJ-加强型

型号 Type	1kV架空绝缘导线截面(mm²) Aerial insulating conductor section	架空绝缘导线外径(mm) Dia. of aerial insulating conductor	10kV架空绝缘导线截面(mm²) Aerial insulating conductor section	握着力(kN) Holding power	破坏荷重(kN) Rupturing power
NXJ-1	16-25	7.2-8.4			7
	35-50	9.8-11.1		1.6	
NXJ-2	50-70	12.6-14.8	16-25	2.4	13.7
	70-95	14.8-16.7	35-50	4.55	
NXJ-3	120-150	17.8-20	70-95	8.9	21
	185-240	20.2-23	120-150	13.65	
NXJ-4		24-26.2	185-240	22.5	43.3
		26.2-28.4	300	28.2	

NXJJ-1

NXJJ-2

NXJJ-3

NXJJ-4

NXL系列楔型耐张线夹及绝缘罩

NXL SERIES WEDGE TYPE OVER-TENSION RESISTANT CLAMP AND INSULATING SHEATH

用途 Application

NXL系列楔型耐张线夹适用于10kV及以下配电线路中，将架空绝缘铝导线或裸铝导线固定在转角或终端耐张杆的绝缘子上，从而将架空导线固定或拉紧，绝缘罩与耐张线夹配套使用，起绝缘防护作用。

NXL series wedge type overension resistant clamp is applicable for 10kV or not more than 10kV distributing line. It fixes aerial insulating aluminum lead or exposed aluminum lead at the outer comer or the insulator of the insulator of the terminal overtension resistant pole, so, the aerial lead can be fixed or tightene d. Insulating sheath matches with the overtension resistant clamp and then be used, so they are insulating and protective.

规格及技术参数 Application

规格型号	使用导线截面积(mm²)	剥线长度LI(mm)	握力(KN)	破坏负荷(KN)	配套绝缘罩型号
NXJ-1	50	245	5.16	14.5	NXZ-1
	70		7.12		
	95		9.40		
NXJ-2	120	255	12.70	23.4	NXZ-2
	150		15.20		
NXJ-3	185	300	18.50	36.3	NXZ-3
	240		23.60		

NXL-1

NXL-2

NXL-3

NXZ-1

NXZ-2

NXZ-3

安装状态图 Installation picture

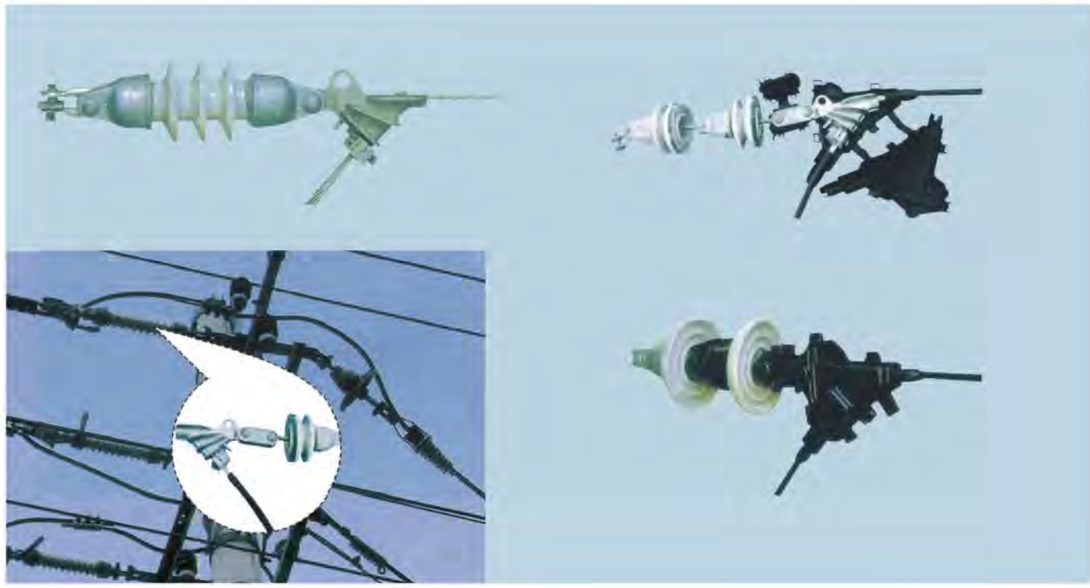

NXT系列楔型耐张线夹及绝缘罩

NXT SERIES WEDGE TYPE OVER-TENSION RESISTANT CLAMP AND INSULATING SHEATH

用途 Application

NXT系列楔型耐张线夹适用于架空电力线路上将导线固定在耐张杆的绝缘子上，从而将架空绝缘铜导线固定或拉紧，绝缘罩和相应的耐张线夹配套使用，起绝缘防护作用。

NXT series wedge type overension resistant clamp is applicable for the aerial electric power line to fix the lead on the insulator of overtension resistant pole, then the aerial insulating copper lead can be fixed or tightened. The insulating sheath matches with relevant overtension resistant clamp and then be used, they are insulating and protective.

规格及技术参数 Application

规格 型号 Type	适用铜导线 规格(mm^2) Specification of applicable copper lead	握着力 (KN) Holding power	破坏荷重 (KN) Rupturing load	配套绝缘罩型号 Matching insulating sheath type
NXT-1	70	15.25	28.62	NXZ-1
	95	20.64		
NXT-2	120	25.94	44.55	NXZ-2
	150	32.18		

NXT-1楔型耐张线夹
NXT-1 wedge type
overtension resistant clamp

NXT-2楔型耐张线夹
NXT-2 wedge type
overtension resistant clamp

安装状态图 Installation picture

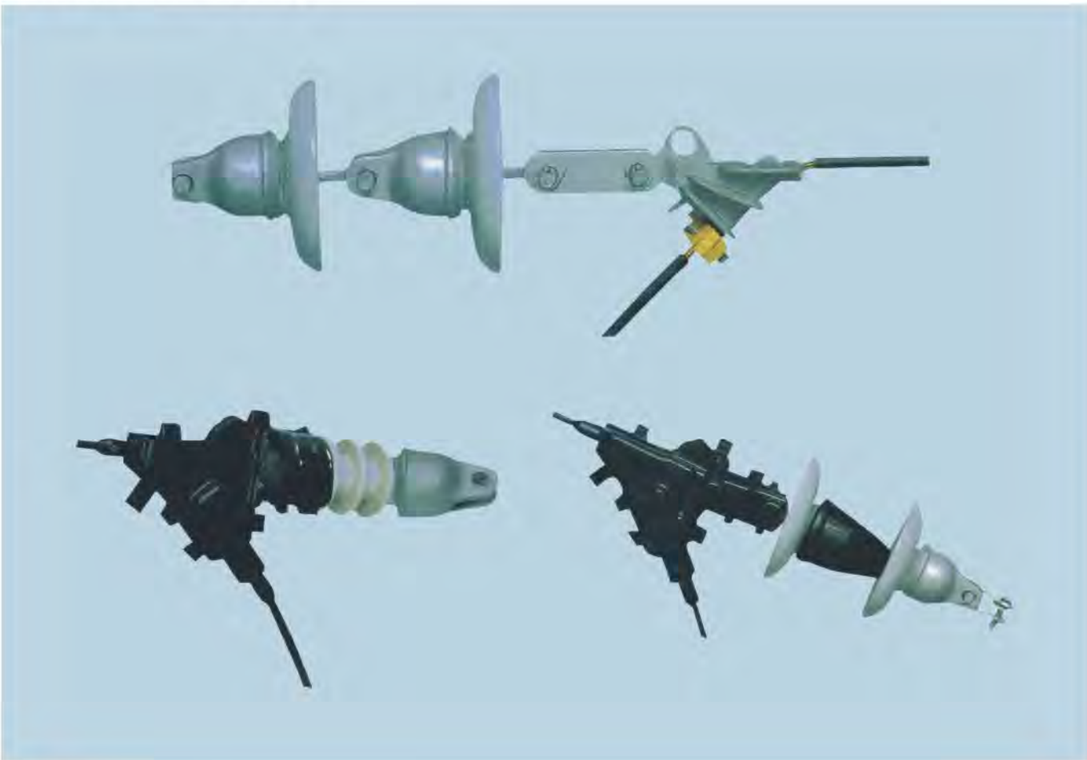

NLL系列配电(变电)用螺栓型铝合金耐张线夹及绝缘罩

NLLSERIES POWER DISTRIBUTION (POWER TRANSFORMER) USES BOLT TYPE ALUMINUM ALLOY STRAIN CLAMP AND INSULATION COVER

用途 Application

NLL系列螺栓型铝合金耐张线夹适用于35kV及以下架空线路中，在耐张杆上固定铝铰线或钢芯铝铰线，用于架空绝缘铝导线时和绝缘铝罩配套使用，起绝缘防护作用。

NLL series bolt type aluminum alloy strain clamp is applicable to 35kV and below aerial circuits. To fix aluminum stranded conductor or steel core aluminum stranded conductor. For matching insulating aluminum cover when using aerial insulating aluminum conductor, for insulating safety action.

外型及安装尺寸 Dimension drawings

型号 Type	适用导线 标称截面 Applicable conductor (mm^2)	适用导线 直径范围 Applicable conductor diameter (mm^2)	架线范围 (含铝绑带) Clip range (mm^2)	U型螺丝 U type bolt(mm^2)		标称破坏载荷 Failure load (mm^2)	配套绝缘型号 Suit insultor cover
				个数 Pieces	直径 Diameter		
NLL-1(190)	16~70	ϕ5.1~11.4	ϕ7.6~16.2	2	M12	40	NLL-2(230)(Z)
NLL-1(230)	50~95	ϕ8.5~13.87	ϕ8.5~19.6	2	M12	40	
NLL-1(285)	70~50	ϕ11.4~17.1	ϕ11.4~22.6	2	M12	70	NLL-3(285)(Z)
NLL-1(320)	120~185	ϕ13~18.9	ϕ13~26.4	3	M12	70	NLL-4(320)(Z)
NLL-1(350)	120~300	ϕ13~23.76	ϕ13~28.6	3	M14	70	NLL-5(350)(Z)

适用于架空绝缘线、铝绞线、钢芯铝绞线的配网使用，不适用于大档距输电线路。
Itis applicable for distributing network use of aerial insulating wire, Alttminium stranded wire, steel core Aluminium stranded wire, but not suitable for remote distance power transmission circuit.

外型及安装尺寸 Dimension drawings

NXH系列铝合金耐张线夹
NXH SERIES ALUMINUM ALLOY OVER-TENSION RESISTANT CLAMP

用途 Application

NXH系列铝合金耐张线夹适用10kV及以下配电线路中，将架空铝导线和杆塔相联接。

NXH series aluminum alloy overtension resistant clamp is applicable for distributing line of 10kV and not more than 10kV jointing the aerial aluminum lead and pole tower.

规格及技术参数 Application

型号 Type	适用导线 Applicable lead	握力(KN) Holding power	破坏荷重(KN) Rupturing load
NXH-1	LJ50-LJ70	7.2	10.95
NXH-2	LJ95-LJ120	12.1	19.42

安装状态图 Installation picture

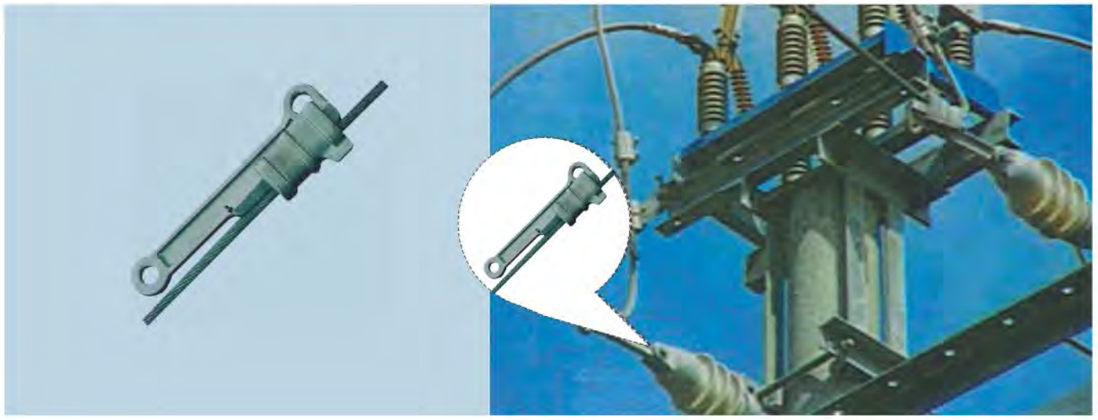

NP-25/50型盘形耐张线夹及绝缘罩
NP-25/50 TYPE DISH OVER-TENSION RESISTANT CLAMP AND INSULATING SHEATH

用途 Application

适用截面小于50mm²小线径绝缘铝绞线或绝缘铜绞线的架空电力线路。

It is applicable for the aerial electric power line of small linear diameterin sulating aluminum twisted wire or copper twisted wire sectional area are not more than 50mm².

规格及技术参数 Application

盘形耐张线夹规格及技术参数 Specifications and technical parameter of the dish shape overtension resistant clamp

型号 Type	适用导线(mm²) Applicable lead	破坏荷重(KN) Rupturing load	配套绝缘罩型号 Matching insulating sheath type
NP-25/50	25~50	19.8	NP(Z)-25/50

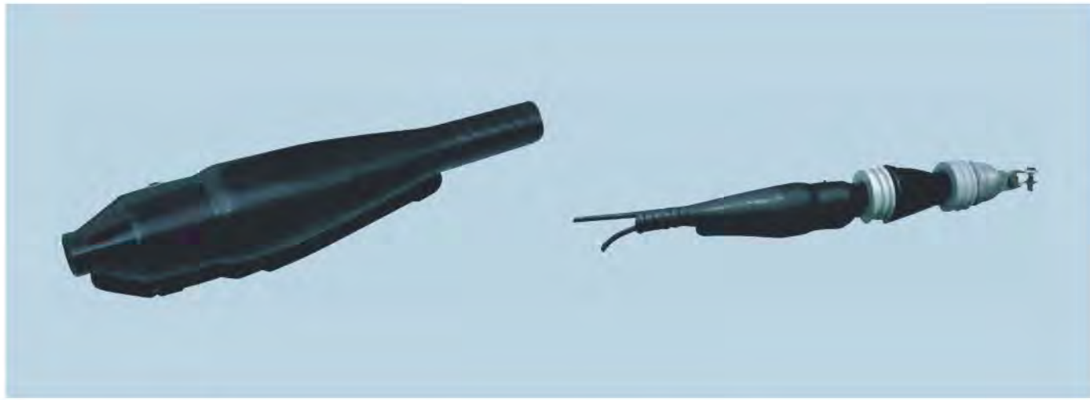

绝缘罩规格及技术参数 Specifications and technical parameter of inulating sheath

型号 Type	工频耐压(V/分) Withstand voltage(V/minute)	绝缘电阻(Ω) Insulation resistance	环境温度 Ambient tempetature
NX(Z)-25/50	40000	$>1.0\times10^{14}$	-30℃~90℃

SL双铁头瓷拉棒及绝缘罩
SL DOUBLE HARDHEAD PORCELAIN PULL ROD AND INSULATING SHEATH

用途 Application

用于架空配电线路中耐张杆上耐张金具与横担之间的绝缘连接。

It is used in insulation connection between the overtension resistant fitting and cross arm of the pole on the aerial distribution power line.

安装状态图 Installation picture

P型平行挂板及绝缘罩
P TYPE PARALLEL SUSPENSION BOARD AND INSULATION SHEATH

用途 Application

用于架空配电线路中耐张金具与绝缘子之间的过渡连接，绝缘罩适用于NXL型耐张线夹绝缘罩配套安装。

It is used in the transition joint be tween the overtension resistant fitting and insulatoron artial distribution line, its insulating sheath is applicable to be equiped with the insulating sheath of NXL type overtension resistant clamp.

安装状态图 Installation picture

JTL JTT JTG系列T型线夹及绝缘罩
JTL JTT JTG SERIES T TYPE CLAMP AND INSULATING SHEATH

用途 Application

JTL、JTT、JTG系列T型线夹适用于10kV架空绝缘电缆的分支接续，也可使用与发电厂，变电所电气设备与架空母线的T型连接。绝缘罩和T型线夹套使用，起绝缘防护作用。

JTL, JTT JTG series T type clamps are applicable for branch connection of 10kV aerial insulating cable, it also can be used in power plant, the T type connection between the electric equipment of substation and aerial bus bar. The insulating sheath is insulating and protective when it is used matching with T type clamp.

规格及技术参数 Application

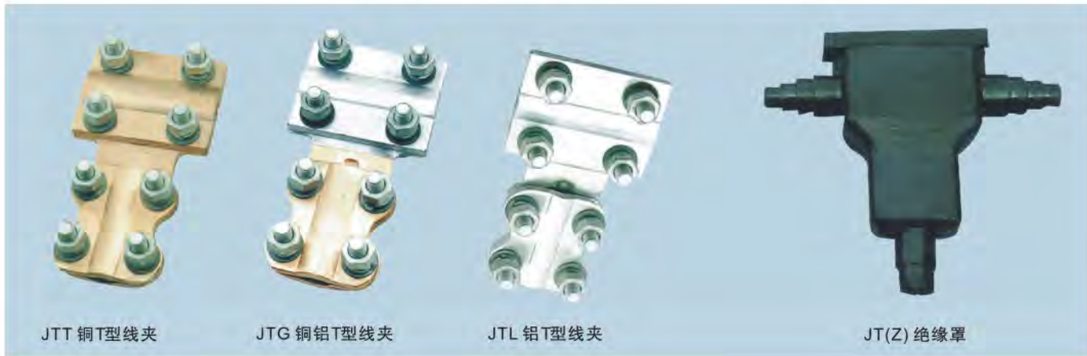

型号 Type	适用导线(mm^2)		配套绝缘罩型号 Matching insulating sheath type
	主导线	分支导线	
JTL、JTT、JTG-1	35~50	35	JT(Z)
JTL、JTT、JTG-2	70~95	70	
JTL、JTT、JTG-3	120~150	120	
JTL、JTT、JTG-4	185~240	185	

安装状态图 Installation picture

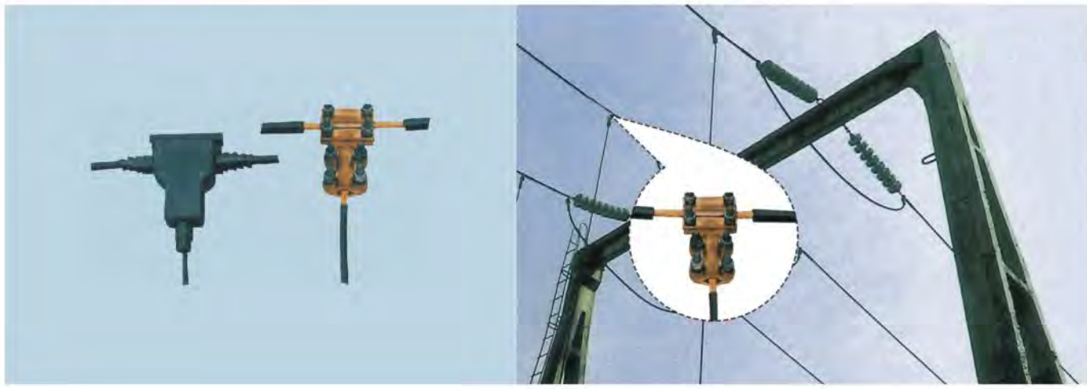

J10FKL J10FKG铝、铜铝过渡分支线夹及绝缘罩

J10FKL J10FKG ALUMINUM, COPPERTO ALUMINUM ADAPTERTEE CONNECTOR AND INSULATING SHEATH

用途 Application

JFKL铝分支线夹及绝缘罩适用于绝缘高压电力线路电缆直接接出到铝导线的分支连接，JFKG铜铝过渡分支线夹适用于绝缘高压电力线路电缆直接接出到铜导线的过渡分支连接。

JFKL aluminum tee connector and its insulating sheath are applicable for the branch jointing of connecting the cable to the aluminum lead on the insulating high voltage electric power line, JFKG copper-alnnamum transition branch connector is used in the transition branch jointing of connecting the cable to the copper lead on the insulating high voltage electric power line.

规格及技术参数 Application

名称 Name	型号 Type	适用主导线(mm^2) Applicable main lead	适用分支导线(mm^2) Applicable off set
铝分支线夹 Aluminum tee connector	J10FKL-25	50~240	25
	J10FKL-35	50~240	35
	J10FKL-50	50~240	50
	J10FKL-70	50~240	70
	J10FKL-95	50~240	95
	J10FKL-120	50~240	120
	J10FKL-150	50~240	150
	J10FKL-185	50~240	185
铜铝过渡分支线夹 Copper-aluminum transition tee connector	J10FKG-25	50~240	25
	J10FKG-35	50~240	35
	J10FKG-50	50~240	50
	J10FKG-70	50~240	70
	J10FKG-95	50~240	95
	J10FKG-120	50~240	120
	J10FKG-150	50~240	150
	J10FKG-185	50~240	185

TTX绝缘跨径T型线夹

T-CONNECTOR FOR INSULATING AND SPANNING DIAMETER

JDT铜单槽线夹

JDT COPPER SINGLE GROOVE CLAMP

用途 Application

25~120铜绞线的接续。配绝缘罩可用于绝缘导线的接续。

It is used in jointing of 25~120 copper twisted wire. The insulating sheath can be used in the jointing of insulating lead.

规格及技术参数 Application

型号 Type	适用同导线范围 Range of applicable copper lead	
	主导线(mm^2) Main lead	支导线(mm^2) Off set
JDT-1	35~70	25~70
JDT-2	95~120	50~120

JY系列接续管及绝缘罩

JY SERIES CONNECTING PIPE AND INSULATING SHEATH

用途 Application

用于架空电力线路中架空绝缘导线的接续。

It is used in the jointing of aerial insulatin lead on the aerial electric power line.

规格及技术参数 Application

型号 Type	适用导线(mm^2) Applicable lead	握力(KN) Holding power	配套绝缘罩型号 Matching insulating sheath type
JY-35LY	JKLYJ-35	4.9	JY-35/50
JY-50LY	JKLYJ-50	6.7	
JY-70LY	JKLYJ-70	9.8	JY-70/95
JY-95LY	JKLYJ-95	13.0	
JY-120LY	JKLYJ-120	16.5	JY-120/95
JY-150LY	JKLYJ-150	20.0	
JY-185LY	JKLYJ-185	25.4	JY-185/240
JY-240LY	JKLYJ-240	33.0	
JY-300LY	JKLYJ-300	38.7	JY-300

JY接续管

JY绝缘罩

J10FKL J10FKG铝、铜铝过渡分支线夹及绝缘罩

J10FKL J10FKG ALUMINUM, COPPERTO ALUMINUM ADAPTERTEE CONNECTOR AND INSULATING SHEATH

用途 Application

用于架空电力线路铜绞线或铜芯绝缘线的非承力接续。

It is used in the unendurable force connection of copper twisted wire or copper core insulating line on the aerial electric power line.

规格及技术参数 Application

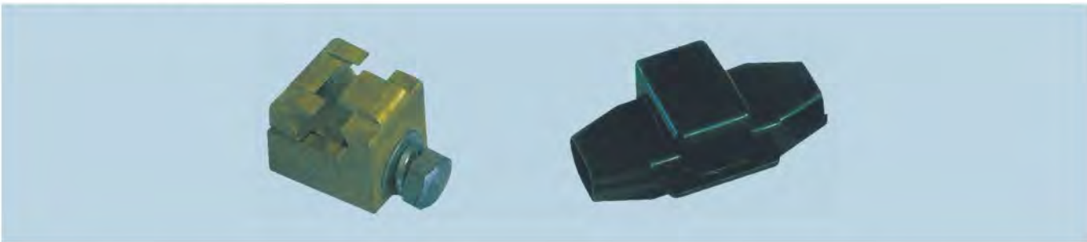

型号 Type	适用导线(mm²) Applicable lead		外形尺寸 Outline dimension L×B×H(mm)	配套绝缘罩型号 Matching insulating sheath type
	材质 Material	截面mm² Sectional area		
JQT-16/50	T	16~50	40×25×35	JQT16/150
JQT-70/95	T	70~95	40×25×35	
JQT-120/150	T	120~150	50×30×40	

FCJ FHC型绝缘接线夹

FCJ FHC TYPE INSULATING CONNECTING CLAMP

JXGY JXGX JXGG悬挂线夹

JXGY JXGX JXGG SUSPENSION CLAMP

B 电缆金具

ELECTRIC CABLE FITTING

DTL系列铜铝接线端子适用于配电装置铝芯电缆与电气设备铜端的过渡连接；DL铝端子用于铝芯电缆与电气设备的铝端连接DT铜端子铜芯电缆与电气设备铜端连接。使用铝材为L2，铜材为T2。产品采用摩擦焊工艺制造，具有焊缝强度高，通电性能好，抗电性能好，抗电化腐蚀，使用寿命长等特点。

GTL铜铝连接管适用于配电装置中铝芯电缆与铜芯电缆的过渡连接，GL铝连接管用于铝芯电缆间连接GT铜连接管用于铜芯电缆间的连接；GT系列堵油型连接管采用T2铜棒车制，GT系列通孔型连接管采用T2铜管料冲制；GL系列堵油型连接管，采用L2铝棒车制，GTL系列铜铝连接管，采用摩擦焊工艺制造，质量可靠。

DTL series Al–Cu connection terminal is suitable for transition joint of distribution device aluminium core cable and electric equipment. DL aluminium is used for aluminium terminal linking of aluminium core cable and electric equipment. DT copper terminal is used for copper terminal electric equipment DT copper terminal is used fir copper terminal linking of copper core cable mad electric equipment, L2: aluminium material, T2: copper material. Tel products adopt friction welding workmanship, It has advantage of good electric conductance, electrochemical corrosion resistance, long service life.

GTL copper aluminium connection tube is suitable for the transition linking of dist–bution cable and copper core cable, GL aluminum connection tube is used for the linking of copper core cable, GT series oil–blocking type connection pipe is machined with T2 bar copper, GT series through–hole type connection pipe is pressed with T2 copper pipe. GTL series of copper–aluminium connection pipe is processed throngh Motion welding workmaship and of reliable qualtiy.

DTL系列铜铝接线端子
COPPER-ALUMINIUM CONNECTING TERMINALS

用途 Application

DTL系列铜铝接线端子适用于配电装置中各种圆型、半圆扇型铝线、电力电缆与电气设备铜端的过渡连接。使用铝材为L3，铜材为T2。产品采用摩擦焊工艺制造，具有焊缝强度高，通电性能好，抗电化腐蚀，使用寿命长等特点。

DTL series of copper-aluminum wiring terminals are suitable for transition connection of the circular aluminium wires, hemicycle-sector aluminium wires, power supply cables in the distribution equipment and copper terminals of the electrical equipment. The material of aluminium and copper is that of L3 and T2 respectively. The technology of friction welding is wonderfully adopted. Therefore they have distinguishing features of strong weld intensity, good nature in electrification, resistant galvanic corrosion and long service life.

外形及安装尺寸 Dimension drawings

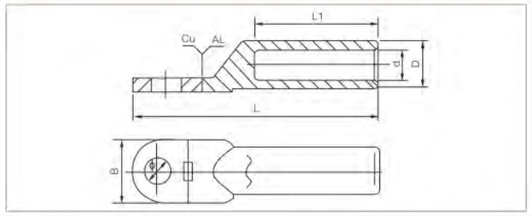

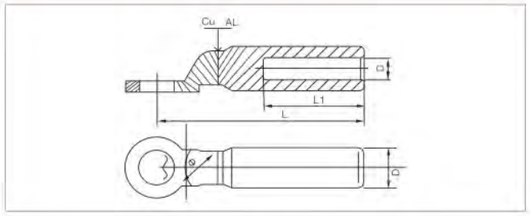

型号 Type	Φ	D	d	L	L1	B
DTL-1-10	8.5	10	6	68	28	16
DTL-1-16	8.5	11	6	70	30	16
DTL-1-25	8.5	12	7	75	34	18
DTL-1-35	10.5	14	8.5	85	38	20.5
DTL-1-50	10.5	16	9.8	90	40	23
DTL-1-70	12.5	18	11.5	102	48	26
DTL-1-95	12.5	21	13.5	112	50	28
DTL-1-120	14.5	23	15	120	53	30
DTL-1-150	14.5	25	16.5	126	56	34
DTL-1-185	16.5	27	18.5	133	58	37
DTL-1-240	16.5	30	21	140	60	40
DTL-1-300	21	34	23.5	160	65	50
DTL-1-400	21	38	27	170	70	55
DTL-1-500	21	45	29	225	75	60
DTL-1-630	-	54	35	245	80	80
DTL-1-800	-	60	38	270	90	100

型号 Type	Φ	D	d	L	L1
DTL-2-16	13	16	5.5	87	42
DTL-2-25	13	16	6.5	87	42
DTL-2-35	13	16	8	87	42
DTL-2-50	13	20	9	87	43
DTL-2-70	13	20	11	87	43
DTL-2-95	13	20	12.5	87	43
DTL-2-120	13	25	13.5	111	60
DTL-2-150	13	25	15.5	111	60
DTL-2-185	13	32	17.5	116	60
DTL-2-240	13	32	19.5	116	60
DTL-2-300	13	34	22.5	120	62

DT DL系列铜、铝接线端子
COPPER, ALUMINIUM CONNECTING TERMINALS

用途 Application

接线端子适用于配电装置中电线、电力电缆与电器设备的连接。DL系列铝接线端子采用(L3)铝棒料压制、DT系列铜接线端子采用(T2)铜棒压制。

Connecting terminals are suitable for the conjunction of wires, cables in the distribution equipment and the electdcal equipment. DL series of aluminum connecting terminals are pressed with aluminium bar(L3), DT series of copper connecting terminals with copper bar(T2).

外形及安装尺寸 Dimension drawings

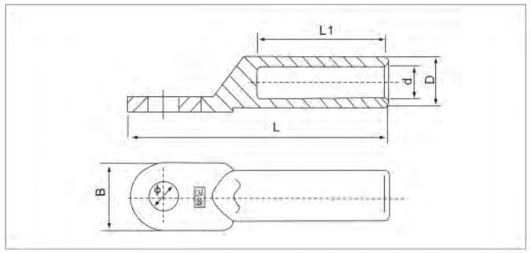

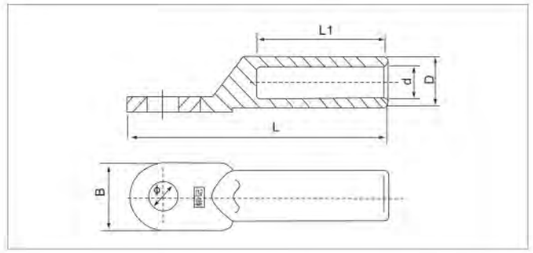

型号 Type	Φ	D	d	L	L1	B
DT-10	8.5	9	5.3	62	28	16
DT-16	8.5	10	6.5	68	30	16
DT-25	8.5	11	7	70	33	18
DT-35	10.5	12	8.5	80	36	20.5
DT-50	10.5	14	9.5	85	38	23
DT-70	12.5	16	11.5	95	43	26
DT-95	12.5	18	13.5	104	46	28
DT-120	14.5	20	15	112	49	30
DT-150	14.5	22	16.5	120	51	34
DT-185	16.5	25	18.5	125	55	37
DT-240	16.5	27	21	136	60	40
DT-300	21	31	23.5	155	66	50
DT-400	21	34	26.5	170	75	50
DT-500	21	38	29	190	75	60
DT-630	21	45	35	220	85	80
DT-800	21	50	38	260	85	100

型号 Type	Φ	D	d	L	L1
DL-10	8.5	9	6	68	28
DL-16	8.5	10	6	70	30
DL-25	8.5	11	7	75	34
DL-35	10.5	12	8.5	85	38
DL-50	10.5	14	9.8	90	40
DL-70	12.5	16	11.5	102	48
DL-95	12.5	18	13.5	112	51
DL-120	14.5	23	15	120	53
DL-150	14.5	25	16.5	126	56
DL-185	16.5	27	18.5	133	58
DL-240	16.5	30	21	140	60
DL-300	21	34	24	160	65
DL-400	21	38	26	170	70
DL-500	21	45	29	190	75
DL-630	21	54	35	220	85
DL-800	21	60	38	260	100

DT(G) JG系列铜接线端子
COPPER CONNECTING TERMINALS

用途 Application

DT(G)适用于配电装置中电线、电力电缆与电气设备的连接，采用(T2)铜管料压制表面镀锡。
JG适用于配电装置中电线、电力电缆与电气设备的连接，采用(T2)铜管料压制，表面镀锡。

These products are applicable to the connection of wires in distribution equipment prower supply cable with electronic apparatus, it is made of (T2) copper tube by die cast and coated tin.
These products are applicable to the connection of wires in distribution equipment prower supply cable with electronic apparatus, it is made of (T2) copper tube by die cast and coated tin.

外形及安装尺寸 Dimension drawings

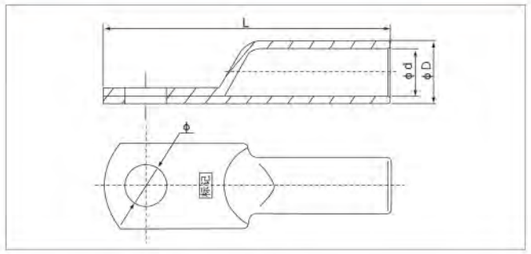

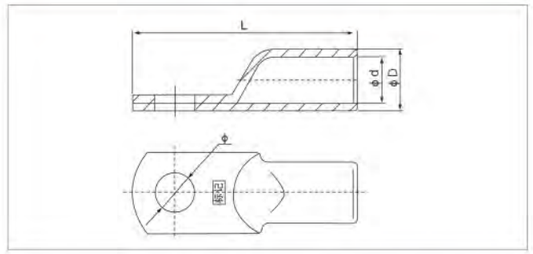

型号 Type	Φ	D	d	L
DT(G)-10	6.2	8	5	52
DT(G)-16	6.2	9	6	57
DT(G)-25	6.2	10	7	62
DT(G)-35	8.5	11	8	66
DT(G)-50	8.5	13	10	72
DT(G)-70	10.5	16	12	80
DT(G)-95	10.5	18	14	85
DT(G)-120	12.5	19	15	96
DT(G)-150	12.5	22	17	102
DT(G)-185	14.5	24	19	114
DT(G)-240	16.5	26	21	120
DT(G)-300	16.5	31	24	135
DT(G)-400	18.5	34	26	150
DT(G)-500	20.5	38	30	170
DT(G)-630	22.5	45	35	210
DT(G)-800	22.5	50	40	270

型号 Type	Φ	D	d	L
JG-10	6.2	8	5	38
JG-16	8.4	9	6	41
JG-25	8.4	10	7	46
JG-35	8.5	11	8	52
JG-50	8.5	13	10	54
JG-70	10.5	16	12	61
JG-95	10.5	18	14	66
JG-120	12.5	19	15	73
JG-150	12.5	22	17	77
JG-185	14.5	24	19	86
JG-240	16.5	26	21	93
JG-300	16.5	31	24	103
JG-400	18.5	34	26	113
JG-500	20.5	38	30	124
JG-630	22.5	45	35	140
JG-800	22.5	50	40	170

GT-1 GL-1连接管(通孔型)
CONNECTING TUBE(PASSING THROUGH)

用途 Application

连接管适用于配电装置中各种圆型，半圆扇型电线，电力电缆之间的连接。GT系列通孔型连接管，采用T2铜管料制造。GL系列通孔型连接管，采用L3铝管制造，质量可靠。

These products are applicable to connect the circular wire and hemicycle-sector. GT series hole-passing connection bube is made of T2 copper tube. GL series hole-passing connection tube is made of L3 aluminium tube, both top quality.

外形及安装尺寸 Dimension drawings

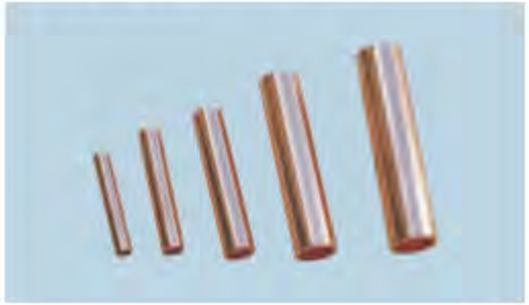

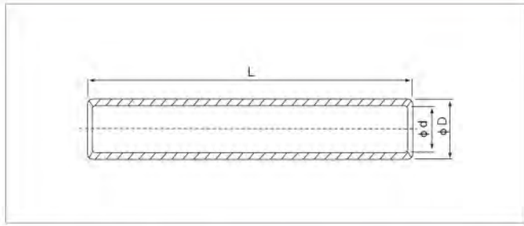

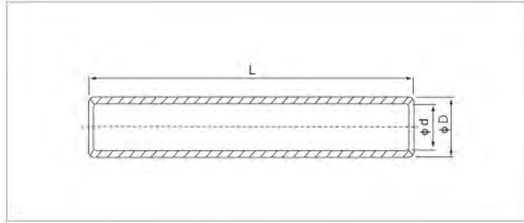

型号 Type	D	d	L
GT-1-10	8	5	52
GT-1-16	9	6	56
GT-1-25	10	7	60
GT-1-35	11	8	64
GT-1-50	13	10	72
GT-1-70	16	12	78
GT-1-95	18	13	85
GT-1-120	19	15	90
GT-1-150	22	17	100
GT-1-185	24	19	105
GT-1-240	26	21	110
GT-1-300	31	24	130
GT-1-400	34	26	150
GT-1-500	38	30	170
GT-1-630	45	35	190

型号 Type	D	d	L
GL-1-10	9	5	52
GL-1-16	10	6	56
GL-1-25	11	7	62
GL-1-35	121	8	67
GL-1-50	15	10	76
GL-1-70	17	11	87
GL-1-95	19	13	92
GL-1-120	21	15	98
GL-1-150	23	17	108
GL-1-185	25	19	114
GL-1-240	28	21	118
GL-1-300	34	24	135

OT铜开口接线鼻
COPPER CONNECTING TERMINALS

用途 Application

适用于配电装置中导线连接。

Suitable for the connection of copper conductors in distribution equipment.

外形及安装尺寸 Dimension drawings

型号 Type	Φ	H	L	R	R1	A
OT-10A	5.2	6	14.5	4.5	2	0.8
OT-20A	6.2	7	17	5.5	2.5	1
OT-30A	6.2	8.2	19	5.8	3.2	1.2
OT-40A	6.2	9	19.5	6.2	3.5	1.2
OT-50A	6.2	9	21.5	6.5	3.5	1.2
OT-60A	8.2	10	23	7	4	1.4
OT-80A	8.2	11	25	8	4.5	1.5
OT-100A	8.2	12	29	8.5	5	1.5
OT-150A	10.2	12	31	9	5.5	1.6
OT-200A	10.2	14	33	10	6	1.7
OT-250A	10.2	15.5	36	10.5	6.5	2
OT-300A	12.2	16	40	11.5	7	2
OT-400A	14.2	18	43	13	8	2.2
OT-500A	14.2	20	46	14.5	8.5	2.4
OT-600A	16.2	22	50.5	16	10.5	2.8
OT-800A	18.2	26	61	17.5	12.5	3.2
OT-1000A	18.2	33	66	20.5	15.5	3.8

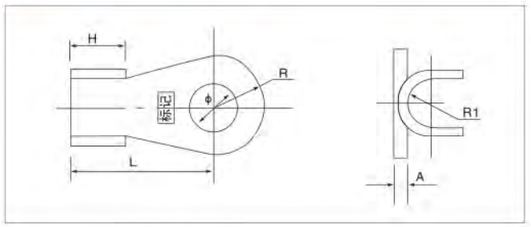

GTL连接管(堵油型)
CONNECTING TUBE(OIL SEAL)

用途 Application

连接管适用于配电装置中各种圆型，半圆扇型电线，电力电缆之间的连接。GT系列堵油型连接管采用铜棒车制，GL系列堵油型连接管采用L3铝棒车制。GTL系列堵油型铜铝连接管。采用摩擦式无钎料焊接焊工艺制造。质量可靠。

These products are applicable to connect the circular wire and hemicycle-sector. GT series hole-passing cormection bube is made of T2 copper tube GL series hole-passing connection tube is made of L3 aluminium tube, both top quality.

外形及安装尺寸 Dimension drawings

型号 Type	D	d	D1	L1	L2	L	d1
GTL-16	10	6	9	30	30	70	5.5
GTL-25	12	7	10	33	30	75	5.8
GTL-35	14	8.5	11	40	30	85	7.1
GTL-50	16	9.8	13	42	32	95	8.3
GTL-70	18	11.5	15	50	38	105	10
GTL-95	21	13.5	17	50	40	110	11.6
GTL-120	23	15	19	55	42	112	13.5
GTL-150	25	17	21	55	44	118	15.6
GTL-185	27	18.5	23	60	46	125	16.5
GTL-240	30	21	26	60	54	130	18.6
GTL-300	34	23	28	65	56	145	21.1
GTL-400	38	27	30	70	60	155	
GTL-500	43	29	34	75	65	165	

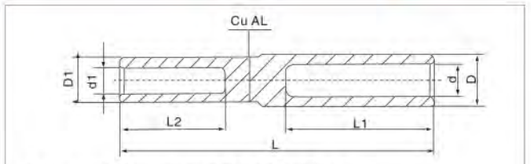

备注：规格后加W表示采用无钎料焊接工艺。

GT-1 GL-2连接管(通孔型)
CONNECTING TUBE (PASSING THROUGH)

用途 Application

连接管适用于配电装置中各种圆型，半圆扇型电线，电力电缆之间的连接。GT系列堵油型连接管采用铜棒车制，GL系列堵油型连接管采用L3铝棒车制。GTL系列堵油型铜铝接连管。采用摩擦焊工艺制造。质量可靠。

These products are applicable to connect the circular wire and hemicycle-sector wire in distribution equipment or power supply cables. GT series connecting tube is made of copper tube. GTL series hole-passing connecting tube is made of frition-welding craft, both top quality.

外形及安装尺寸 Dimension drawings

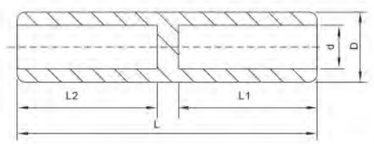

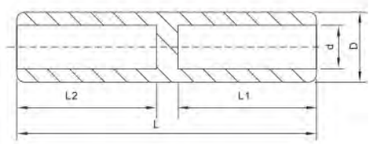

型号 Type	D	d	L1	L
GT-2-16	10	6.5	30	65
GT-2-25	11	7	32	70
GT-2-35	12	8.5	34	75
GT-2-50	14	9.8	35	80
GT-2-70	16	11.5	42	90
GT-2-95	18	13.5	43	95
GT-2-120	20	15	47	100
GT-2-150	22	17	49	105
GT-2-185	25	19	50	110
GT-2-240	27	21	55	120
GT-2-300	31	23	60	130
GT-2-400	34	26	65	140

型号 Type	D	d	L1	L
GL-2-16	10	6	30	70
GL-2-25	12	7	32	75
GL-2-35	14	8.5	37	85
GL-2-50	16	9.8	42	95
GL-2-70	18	11.5	47	105
GL-2-95	21	13.5	50	11
GL-2-120	23	15	52	115
GL-2-150	25	16.5	55	120
GL-2-185	27	18.6	57	125
GL-2-240	30	21	60	130
GL-2-300	34	23	64	140
GL-2-400	38	26	70	160

SC(JGK)、SC(JGA)引进铜接线端子
IMPORTED COPPER TERMINALS

用途 Application

适用于标称截面1.5mm²-1000mm²电力电缆式电线的铜导体与电气设备的连接。特点，采用管料含铜量>99.9%的高纯T2铜管制造，长期工作温度-55℃—150℃，表面镀锡。

There predicts are suitable for the connection of copper conductors(section 1.5mm²-1000mm²) in power cable with electronic equipment they are made of with higher 99.9 percent pure copper tube T2 and coated with tin, working temperature-55℃-150℃.

外形及安装尺寸 Dimension drawings

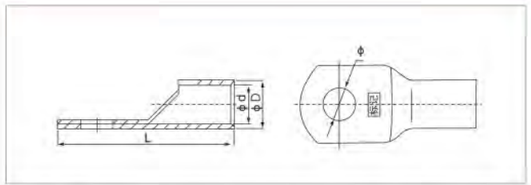

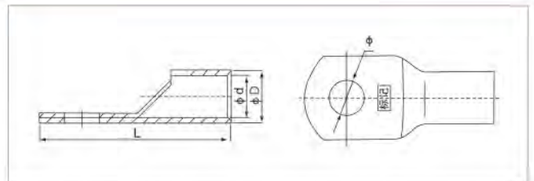

型号 Type	Φ	D	d	L
SC(JGK)-1.5	Φ4.2, Φ5.2	3.5	1.8	18
SC(JGK)-2.5	Φ4.2, Φ5.2, Φ6.2	4	2.5	19
SC(JGK)-4	Φ5.2, Φ6.2	4.8	3.1	21
SC(JGK)-6	Φ5.2, Φ6.2, Φ8.2	5.5	3.8	24
SC(JGK)-10	Φ6.2, Φ8.2	6.8	4.8	25.5
SC(JGK)-16	Φ6.2, Φ8.2, Φ10.5	7.5	5.5	30.5
SC(JGK)-25	Φ6.2, Φ8.2, Φ10.5	9	7	34
SC(JGK)-35	Φ6.2, Φ8.2, Φ10.5, Φ12.5	10.5	8.2	38
SC(JGK)-50	Φ8.2, Φ10.5, Φ12.5	12.5	9.8	45
SC(JGK)-70	Φ8.2, Φ10.5, Φ12.5	14.5	11.5	50
SC(JGK)-95	Φ10.5, Φ12.5	17.5	13.8	55.5
SC(JGK)-120	Φ12.5, Φ16.5	19.5	15.5	63
SC(JGK)-150	Φ12.5, Φ16.5	21	16.5	71
SC(JGK)-185	Φ16.5	23.5	18.8	78
SC(JGK)-240	Φ16.5	26.5	21	92
SC(JGK)-300	Φ16.5, Φ20.5	30	24	102
SC(JGK)-400	Φ16.5, Φ20.5	34	26.5	113
SC(JGK)-500	Φ16.5, Φ20.5	38	30	123
SC(JGK)-630	Φ20.5	45	35	135
SC(JGK)-800	Φ22.5	50	39	170
SC(JGK)-1000	Φ22.5	56	44	200

型号 Type	Φ	D	d	L
SC(JGA)-1.5	Φ4.2, Φ5.2	3.5	1.8	18
SC(JGA)-2.5	Φ4.2, Φ5.2, Φ6.2	4	2.5	19
SC(JGA)-4	Φ5.2, Φ6.2	4.8	3.1	21
SC(JGA)-6	Φ5.2, Φ6.2, Φ8.2	5.5	3.8	24
SC(JGA)-10	Φ6.2, Φ8.2	6.8	4.8	25.5
SC(JGA)-16	Φ6.2, Φ8.2, Φ10.5	7.5	5.5	30.5
SC(JGA)-25	Φ6.2, Φ8.2, Φ10.5	9	7	34
SC(JGA)-35	Φ6.2, Φ8.2, Φ10.5, Φ12.5	10.5	8.2	38
SC(JGA)-50	Φ8.2, Φ10.5, Φ12.5	12.5	9.8	45
SC(JGA)-70	Φ8.2, Φ10.5, Φ12.5	14.5	11.5	50
SC(JGA)-95	Φ10.5, Φ12.5	17.5	13.8	55.5
SC(JGA)-120	Φ12.5, Φ16.5	19.5	15.5	63
SC(JGA)-150	Φ12.5, Φ16.5	21	16.5	71
SC(JGA)-185	Φ16.5	23.5	18.8	78
SC(JGA)-240	Φ16.5	26.5	21	92
SC(JGA)-300	Φ16.5, Φ20.5	30	24	102
SC(JGA)-400	Φ16.5, Φ20.5	34	26.5	113
SC(JGA)-500	Φ16.5, Φ20.5	38	30	123
SC(JGA)-630	Φ20.5	45	35	135
SC(JGA)-800	Φ22.5	50	39	170
SC(JGA)-1000	Φ22.5	56	44	200

SC(JGY) SC(JGB)引进窥口三角型，嗽叭型铜接线端子
IMPORTED SPY TRIANGLE, BELL MOUTH COPPER CONNECTING TERMINALS

用途 Application

适用于标称截面1.5mm²-1000mm²电力电缆式电线的铜导体与电气设备的连接。特点，采用管料含铜量>99.9%的高纯T2铜管制造，长期工作温度-55℃-150℃，表面镀锡。

There predicts are suitable for the connection of copper conductors(section 1.5mm²-1000mm²) in power cable with electronic equipment they are made of with higher 99.9 percent pure copper tube T2 and coated with tin, working temperature-55℃-150℃.

外形及安装尺寸 Dimension drawings

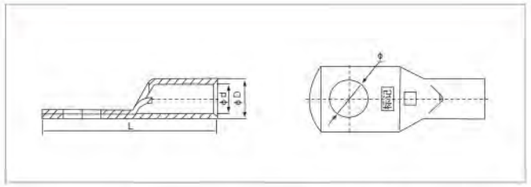

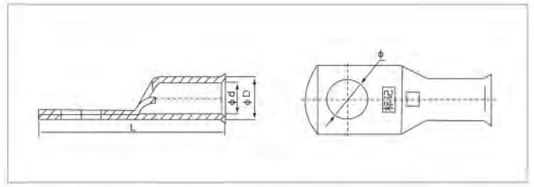

型号 Type	Φ	D	d	L
SC(JGY)-1.5	Φ4.2, Φ5.2	3.5	1.8	18
SC(JGY)-2.5	Φ4.2, Φ5.2, Φ6.2	4	2.5	19
SC(JGY)-4	Φ5.2, Φ6.2	4.8	3.1	21
SC(JGY)-6	Φ5.2, Φ6.2, Φ8.2	5.5	3.8	24
SC(JGY)-10	Φ6.2, Φ8.2	6.8	4.8	25.5
SC(JGY)-16	Φ6.2, Φ8.2, Φ10.5	7.5	5.5	30.5
SC(JGY)-25	Φ6.2, Φ8.2, Φ10.5	9	7	34
SC(JGY)-35	Φ6.2, Φ8.2, Φ10.5, Φ12.5	10.5	8.2	38
SC(JGY)-50	Φ8.2, Φ10.5, Φ12.5	12.5	9.8	45
SC(JGY)-70	Φ8.2, Φ10.5, Φ12.5	14.5	11.5	50
SC(JGY)-95	Φ10.5, Φ12.5	17.5	13.8	55.5
SC(JGY)-120	Φ12.5, Φ16.5	19.5	15.5	63
SC(JGY)-150	Φ12.5, Φ16.5	21	16.5	71
SC(JGY)-185	Φ16.5	23.5	18.8	78
SC(JGY)-240	Φ16.5	26.5	21	92
SC(JGY)-300	Φ16.5, Φ20.5	30	24	102
SC(JGY)-400	Φ16.5, Φ20.5	34	26.5	113
SC(JGY)-500	Φ16.5, Φ20.5	38	30	123
SC(JGY)-630	Φ20.5	45	35	135
SC(JGY)-800	Φ22.5	50	39	170
SC(JGY)-1000	Φ22.5	56	44	200

型号 Type	Φ	D	d	L
SC(JGB)-1.5	Φ4.2, Φ5.2	3.5	1.8	18
SC(JGB)-2.5	Φ4.2, Φ5.2, Φ6.2	4	2.5	19
SC(JGB)-4	Φ5.2, Φ6.2	4.8	3.1	21
SC(JGB)-6	Φ5.2, Φ6.2, Φ8.2	5.5	3.8	24
SC(JGB)-10	Φ6.2, Φ8.2	6.8	4.8	25.5
SC(JGB)-16	Φ6.2, Φ8.2, Φ10.5	7.5	5.5	30.5
SC(JGB)-25	Φ6.2, Φ8.2, Φ10.5	9	7	34
SC(JGB)-35	Φ6.2, Φ8.2, Φ10.5, Φ12.5	10.5	8.2	38
SC(JGB)-50	Φ8.2, Φ10.5, Φ12.5	12.5	9.8	45
SC(JGB)-70	Φ8.2, Φ10.5, Φ12.5	14.5	11.5	50
SC(JGB)-95	Φ10.5, Φ12.5	17.5	13.8	55.5
SC(JGB)-120	Φ12.5, Φ16.5	19.5	15.5	63
SC(JGB)-150	Φ12.5, Φ16.5	21	16.5	71
SC(JGB)-185	Φ16.5	23.5	18.8	78
SC(JGB)-240	Φ16.5	26.5	21	92
SC(JGB)300	Φ16.5, Φ20.5	30	24	102
SC(JGB)400	Φ16.5, Φ20.5	34	26.5	113
SC(JGB)-500	Φ16.5, Φ20.5	38	30	123
SC(JGB)-630	Φ20.5	45	35	135
SC(JGB)-800	Φ22.5	50	39	170
SC(JGB)-1000	Φ22.5	56	44	200

GTY 引进铜接线管
IMPORTED COPPER CONNECTNG TUBE

用途 Application

适用于配电装置中各种圆型、半圆扇型电线电力电缆之间的连接，采用管料含铜量≥99.9%的高纯T2铜管制造，表面镀锡。

These products are applicable for the connection of the circular wire, hemicyde wire with power supply cable in distribution equipment. They are made of higher 99.9 percent pure T2 copper tube, and coated tin.

外形及安装尺寸 Dimension drawings

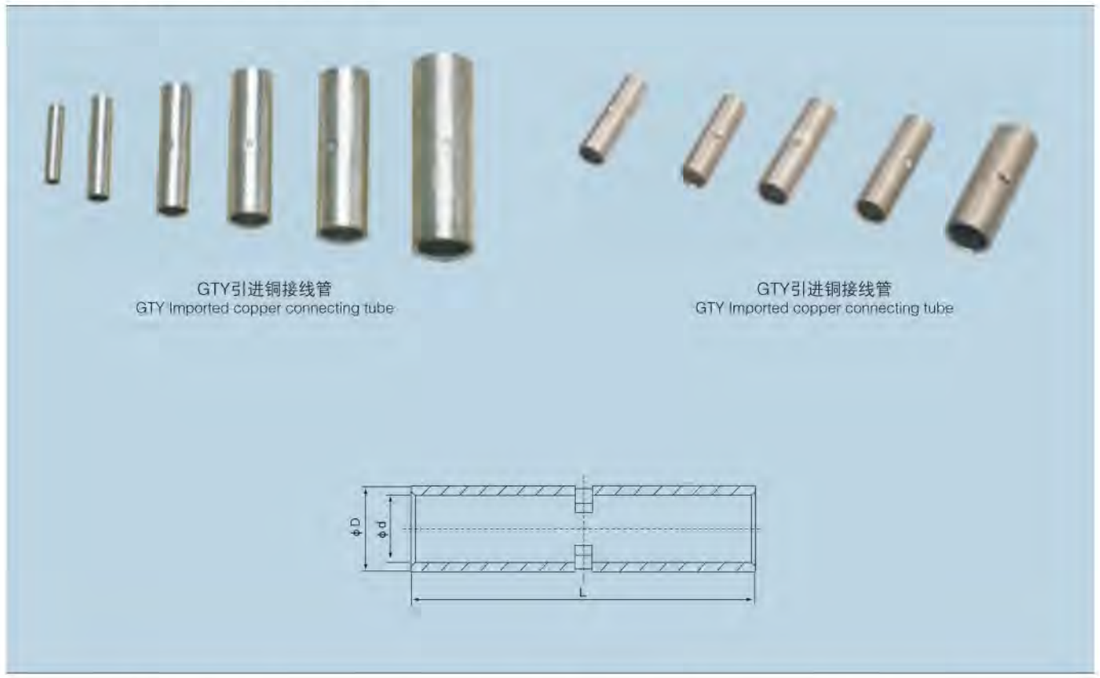

型号 Type	D	d	L	型号 Type	D	d	L
GTY-1.5	3.7	1.8	20	GTY-120	19.5	15	65
GTY-2.5	4	2.5	20	GTY-150	21	16.5	70
GTY-4	4.8	3.1	20	GTY-185	23.5	18.5	75
GTY-5.5	5.5	3.8	25	GTY-240	26.5	21	80
GTY-10	6.8	4.8	30	GTY-300	30	24	85
GTY-16	7.5	5.5	35	GTY-400	34	27	60
GTY-25	9	7	40	GTY-500	38	30	100
GTY-35	10.5	8.2	45	GTY-630	45	35	110
GTY-50	12.5	9.8	50	GTY-800	50	39	150
GTY-70	14.5	11.5	55	GTY-1000	56	44	170
GTY-95	17.5	13.5	60				

DLT 系列铝铜接线端子
ALUMINIUM-COPPER CONNECTING TERMINALS

用途 Application

适用于配电装置中电线、电力电缆与电气设备的连接．采用T2铜棒压制及L3铝棒摩擦焊工艺制造。

Suitable for the connection of the wires in contribution equipment and power supply cables with electronic apparatus, adopting T2 copper tube and L3 aluminum friction-welding craft.

外形及安装尺寸 Dimension drawings

型号 Type	Φ	D	D	L
DLT-10	8.5	10	6	68
DLT-16	8.5	11	6	70
DLT-25	8.5	12	7	75
DLT-35	10.5	14	8.5	85
DLT-50	10.5	16	9.8	90
DLT-70	12.5	18	11.5	102
DLT-95	12.5	21	13.5	112
DLT-120	14.5	23	15	120
DLT-150	14.5	25	16.5	126
DLT-185	16.5	27	18.5	133
DLT-240	16.5	30	21	140
DLT-300	21	34	23.5	160

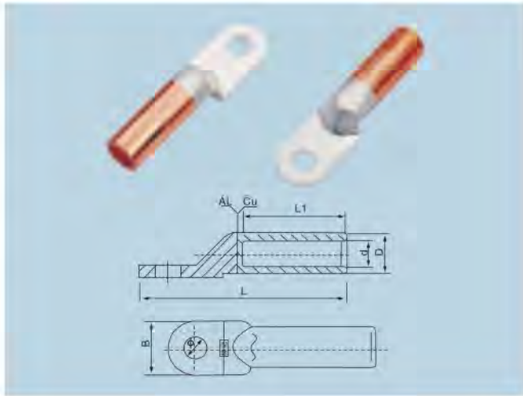

C45插针
C45 PLUG-IN NEEDLE

用途 Application

适用于配电装置中电线、电力电缆与电气设备的连接，采用T2铜棒压制。

Suitable for the connectiou of the wires in contribution equipment and power supply cables with electronic apparatus，adopting T2 copper tube pressing.

外形及安装尺寸 Dimension drawings

型号 Type	D	d	L	L1
4²	5	3	26	10
6²	6	4	26	10
10²	7.5	5	34	13.5
16²	8.5	6	35	14
25²	10	7	38	14.5
35²	11	8	42	15
50²	13	10	47	15.5
70²	16	12	51	16
95²	18	14	56	18

引进C45插针，采用T2铜管制造，表面镀锡

Imported C45 plug-in needle, adopted T2 Copper tube, and coatedtin.

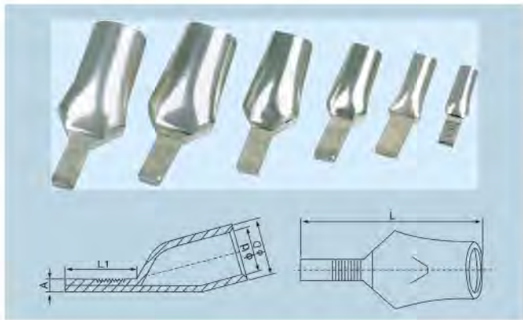

DTF防水型铜端子
WATER-PROOF COPPER TERMINAL

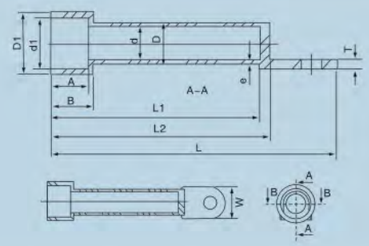

型号 Type	通用螺栓	D	d	A	B	e	W	L	L1	L2	D1	d1
DTF-25	M8	10	7	18	21	2	15	85	50	55	34	28
DTF-35	M8	12	9	18	21	2	16	95	54	60	34	28
DTF-50	M10	14	10	18	21	3	19	100	55	64	34	28
DTF-40	M10	16	12	18	21	3	23	110	60	66	34	28
DTF-95	M12	18	13	18	21	3	27	120	65	72	34	28
DTF-120	M12	21	15	18	21	3	30	125	68	75	34	28
DTF-150	M16	23	16	18	21	3	33	130	68	75	34	28
DTF-185	M16	25	18	18	21	3	36	145	73	80	34	28
DTF-240	M16	28	20	18	21	3	40	150	78	86	34	28
DTF-300	M16	31	22	18	21	3	45	160	84	92	34	28
DTF-400	M16	35	25	18	21	4	50	170	92	100	41	33
DTF-500	M16	38	28	18	21	4	55	180	92	100	41	33
DTF-630	M16	42	32	18	21	4	65	200	102	110	41	33

防水型铜端子
Water-proof copper terminal

双孔型接线端子
Double hole

C 变电金具
POWERSTATION FITTING

设备线夹 Terminal fitting

设备线夹主要用于变电所母线引下线与电气设备(如变压器、短路器、隔离开关、互感器)的出线端子连接，穿墙套管与母线的续。因常用电气设备的出线端子为铜质和铝质两类，而母线印出线分为铝绞线或钢芯铝绞线，故设备线夹从材质上分为铝设备线夹和铜铝过渡设备线夹两个系列。根据安装方式和结构形式的不同，设备线夹分螺栓型、压缩型两种类型。每种型式的线夹按引下线与安装电气设备端子所形成角的不同分为0°、45°、90°三种。

产品型号中字母和数字是意义为：

S-设备线夹、双　Y-压缩型　L-螺栓型　G-过渡(铜、铝过渡)

数字表示活用导线标称截面积

附加字母的意义为

A-0°　B30°　B1-45°　C-90°

Terminal connecting clamps are mainly applicable to the connection of leading-down wires in the power distribution station and the outlet terminals of electrical equipments (e.g.trasformer, segregating switch, circuit breaker, mutual inductancer), also wall busings and bus-bars outlets are sorted to aluminium gel wires or steelcored alumina gel wires, the materials of termina connecting clamps are grouped into aluminium terminal connecting series and copper-aluminium transiton terminal connecting series. According to the differences in the metod of fitting and stucture, the clamps are sorted into two kinds, bolt type and compression type. Every type is different according to the angle 0° ,45° ,90° that formed between leading-down wire and the fitting terminals of electrical equpments.

The meaning of letters and figures (appeared in the type).

S: terminal connecting clamp, double　Y: compression type

L: bolt type　G: transition (copper-aluminium transition).

The number-1,2 etc. means it suitable for higher lead groups 120···300 etc. means it spplicable to normal lead demarcating section.

Additional letters mean: A-0°　B-30°　B1-45°　C-90°

SYG 铜铝过渡设备线夹(压接型A类)

SYG COPPER-ALUMINIUM TRANSITION TERMINAL CONNECTING CLAMP(COMPERSSION TYPE A)

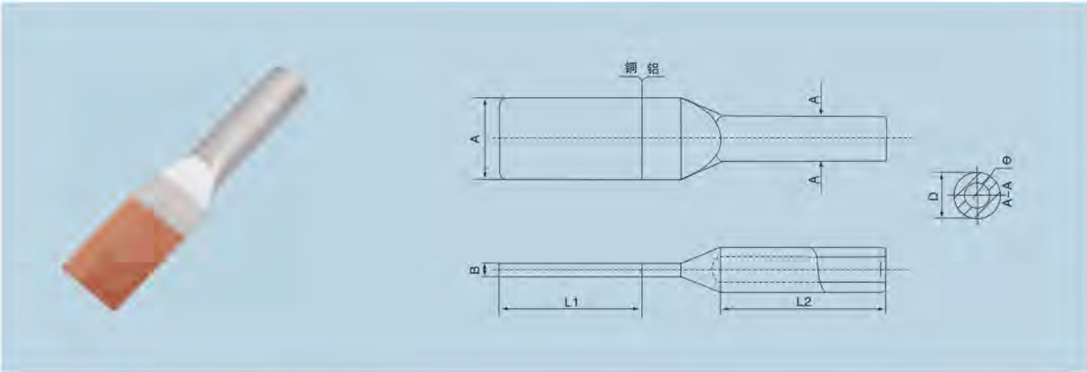

型号 Type	适用导线范围 Conductor	主要尺寸 Dimensions(mm)						重量 Wieght(kg)
		A	B	D	L1	L2	Φ	
SYG-50A	LGJ-50	40	5.0	18	60	60	11	0.2
SYG-70A	LGJ-70	40	5.0	22	70	80	13	0.3
SYG-95A	LGJ-95	50	5.0	26	80	80	15	0.3
SYG-120A	LGJ-120	50	5.0	26	80	85	16	0.5
SYG-150A	LGJ-150	50	5.0	30	80	85	18	0.6
SYG-185A	LGJ-185	50	6.3	32	80	85	20.5	0.5
SYG-120/7A	LGJ-120/7	50	5.0	26	80	80	16	0.3
SYG-150/8A	LGJ-150/8	50	5.0	30	80	90	17.5	0.3
SYG-150/20A	LGJ-150/20	50	5.0	30	80	90	18	0.3
SYG-185/10A	LGJ-185/10	50	6.3	32	80	90	19.2	0.4
SYG-185/25A	LGJ-185/25	50	6.3	32	80	90	20.5	0.4
SYG-240/30A	LGJ-240/30	50	6.3	36	80	100	23	0.4
SYG-300/15A	LGJ-300/15	63	8.0	40	100	110	24.5	0.7
SYG-300/20A	LGJ-300/20	63	8.0	40	100	110	25	0.7
SYG-300/25A	LGJ-300/25	63	8.0	40	100	110	25.5	0.7
SYG-300/40A	LGJ-300/40	63	8.0	40	100	110	25.5	0.7
SYG-400/20A	LGJ-400/20	63	8.0	45	100	120	28	0.8
SYG-400/25A	LGJ-400/25	63	8.0	45	100	120	28.5	0.8
SYG-400/35A	LGJ-400/35	63	8.0	45	100	120	28.5	0.8
SYG-400/50A	LGJ-400/50	63	8.0	45	100	120	29	0.8
SYG-500/35A	LGJ-500/35	80	8.0	52	80	130	31.5	1.0
SYG-500/45A	LGJ-500/45	80	8.0	52	80	130	31.5	1.0
SYG-500/65A	LGJ-500/65	80	8.0	52	80	130	32.5	1.0
SYG-630/45A	LGJ-630/45	100	10	60	100	150	35.5	1.6
SYG-630/55A	LGJ-630/55	100	10	60	100	150	36	1.6
SYG-630/80A	LGJ-630/80	100	10	60	100	150	36.5	1.6
SYG-800/55A	LGJ-800/55	125	12.5	65	125	170	40	2.9
SYG-800/70A	LGJ-800/70	125	12.5	65	125	170	40.5	2.9
SYG-800/100A	LGJ-800/100	125	12.5	65	125	170	40.5	2.9

注：1.线夹采用内光焊工艺制造，根据用户要求，铜铝过渡也可采用针焊工艺；
2.若用户所需线夹尺寸与表中不同，订货时请另注明。

SYG 铜铝过渡设备线夹(压接型B类)

SYG COPPER-ALUMINIUM TRANSITION TERMINAL CONNECTING CLAMP(COMPERSSION TYPE B)

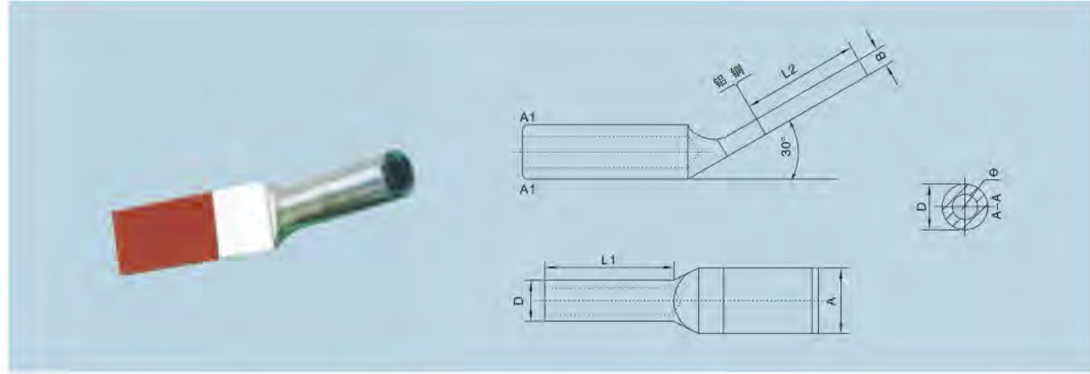

型号 Type	适用导线范围 Conductor	主要尺寸 Dimensions(mm)						重量 Wieght(kg)
		A	B	D	L1	L2	Φ	
SYG-50B	LGJ-50	40	5.0	18	60	60	11	0.2
SYG-70B	LGJ-70	40	5.0	22	70	80	13	0.3
SYG-95B	LGJ-95	50	5.0	26	80	80	15	0.3
SYG-120B	LGJ-120	50	5.0	26	80	85	16	0.5
SYG-150B	LGJ-150	50	5.0	30	80	85	18	0.6
SYG-185B	LGJ-185	50	6.3	32	80	85	20.5	0.5
SYG-120/7B	LGJ-120/7	50	5.0	26	80	80	16	0.3
SYG-150/8B	LGJ-150/8	50	5.0	30	80	90	17.5	0.3
SYG-150/20B	LGJ-150/20	50	5.0	30	80	90	18	0.3
SYG-185/10B	LGJ-185/10	50	6.3	32	80	90	19.2	0.4
SYG-185/25B	LGJ-185/25	50	6.3	32	80	90	20.5	0.4
SYG-240/30B	LGJ-240/30	50	6.3	36	80	100	23	0.6
SYG-300/15B	LGJ-300/15	63	8.0	40	100	110	24.5	0.7
SYG-300/20B	LGJ-300/20	63	8.0	40	100	110	25	0.7
SYG-300/25B	LGJ-300/25	63	8.0	40	100	110	25.5	0.7
SYG-300/40B	LGJ-300/40	63	8.0	40	100	110	25.5	0.7
SYG-400/20B	LGJ-400/20	63	8.0	45	100	120	28.5	0.9
SYG-400/25B	LGJ-400/25	63	8.0	45	100	120	28.5	0.9
SYG-400/35B	LGJ-400/35	63	8.0	45	100	120	28.5	0.9
SYG-400/50B	LGJ-400/50	63	8.0	45	100	120	29	0.9
SYG-500/35B	LGJ-500/35	80	8.0	52	80	130	31.5	1.1
SYG-500/45B	LGJ-500/45	80	8.0	52	80	130	31.5	1.1
SYG-500/65B	LGJ-500/65	80	8.0	52	80	130	32.5	1.1
SYG-630/45B	LGJ-630/45	100	10	60	100	150	35.5	1.8
SYG-630/55B	LGJ-630/55	100	10	60	100	150	36	1.8
SYG-630/80B	LGJ-630/80	100	10	60	100	150	36.5	1.8
SYG-800/55B	LGJ-800/55	125	12.5	65	125	170	40	3.0
SYG-800/70B	LGJ-800/70	125	12.5	65	125	170	40.5	3.0
SYG-800/100B	LGJ-800/100	125	12.5	65	125	170	40.5	3.0

注：1.线夹采用内光焊工艺制造，根据用户要求，铜铝过渡也可采用针焊工艺；
2.若用户所需线夹尺寸与表中不同，订货时请另注明。

SY系列设备线夹(压接型A类)

SY ALUMINIUM TERMINAL CONNECTING CAMP(COMPERSSIN TYPE A)

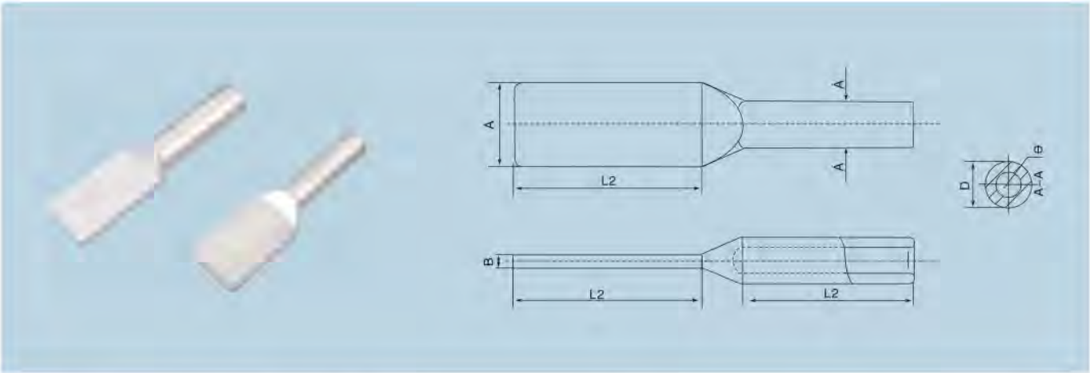

型号 Type	适用导线范围 Conductor	主要尺寸 Dimensions(mm)						重量 Wieght(kg)
		A	B	D	L1	L2	Φ	
SY-35/6A	LGJ-35/6	30	8	16	60	60	9.5	0.1
SY-50/8A	LGJ-50/8	30	8	18	60	60	11	0.1
SY-70/10A	LGJ-70/10	40	8	22	70	80	13	0.1
SY-95/15A	LGJ-95/15	40	8	26	80	80	15	0.2
SY-120/7A	LGJ-120/7	50	10	26	80	85	16	0.2
SY-150/8A	LGJ-150/8	50	10	30	90	85	18	0.3
SY-150/20A	LGJ-150/20	50	10	30	90	85	18	0.3
SY-185/10A	LGJ-185/10	50	10	32	90	85	20.5	0.3
SY-185/25A	LGJ-185/25	50	10	32	90	85	19.5	0.3
SY-240/30A	LGJ-240/30	50	12	36	100	100	23	0.5
SY-300/15A	LGJ-300/15	63	12	40	110	110	24.5	0.6
SY-300/20A	LGJ-300/20	63	12	40	110	110	25	0.6
SY-300/25A	LGJ-300/25	63	12	40	110	110	25.5	0.6
SY-300/40A	LGJ-300/40	63	12	40	110	110	25.5	0.6
SY-400/20A	LGJ-400/20	63	13	45	120	110	28.5	0.7
SY-400/25A	LGJ-400/25	63	13	45	120	110	28.5	0.7
SY-400/35A	LGJ-400/35	63	13	45	120	110	28.5	0.7
SY-400/50A	LGJ-400/50	63	13	45	120	110	29.5	0.7
SY-500/35A	LGJ-500/35	80	16	52	130	90	31.5	1.0
SY-500/45A	LGJ-500/45	80	16	52	130	90	32.5	1.0
SY-500/65A	LGJ-500/65	80	16	52	130	90	32.5	1.0
SY-630/45A	LGJ-630/45	100	20	60	150	100	32.5	1.2
SY-630/55A	LGJ-630/55	100	20	60	150	100	36	1.2
SY-630/80A	LGJ-630/80	100	20	60	150	100	36.5	1.2
SY-800/55A	LGJ-800/55	125	22	65	170	125	40	2.1
SY-800/70A	LGJ-800/70	125	22	65	170	125	40.5	2.1
SY-800/100A	LGJ-800/100	125	22	65	170	125	40.5	2.1

注：1.线夹采用内光焊工艺制造，根据用户要求，铜铝过渡也可采用针焊工艺；
2.若用户所需线夹尺寸与表中不同，订货时请另注明。

SY系列设备线夹(压接型B类)

SY ALUMINIUM TERMINAL CONNECTING CAMP(COMPERSSIN TYPE B)

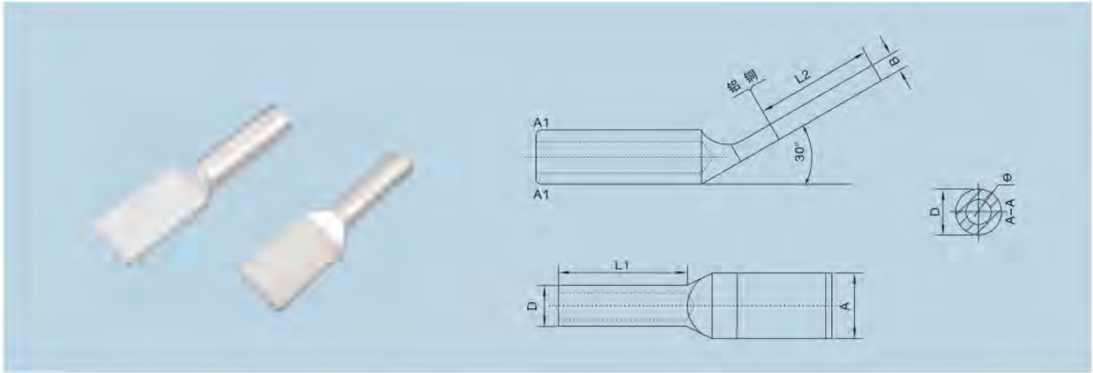

型号 Type	适用导线范围 Conductor	主要尺寸 Dimensions(mm)						重量 Wieght(kg)
		A	B	D	L1	L2	Φ	
SY-35/6B	LGJ-35/6	30	8	16	60	60	9.5	0.1
SY-50/8B	LGJ-50/8	30	8	18	60	60	11	0.1
SY-70/10B	LGJ-70/10	40	8	22	70	80	13	0.1
SY-95/15B	LGJ-95/15	40	8	26	80	80	15	0.2
SY-120/7B	LGJ-120/7	50	10	26	80	85	16	0.2
SY-150/8B	LGJ-150/8	50	10	30	90	85	18	0.3
SY-150/20B	LGJ-150/20	50	10	30	90	85	18	0.3
SY-185/10B	LGJ-185/10	50	10	32	90	85	20.5	0.3
SY-185/25B	LGJ-185/25	50	10	32	90	85	19.5	0.3
SY-240/30B	LGJ-240/30	50	12	36	100	100	23	0.5
SY-300/15B	LGJ-300/15	63	12	40	110	110	24.5	0.6
SY-300/20B	LGJ-300/20	63	12	40	110	110	25	0.6
SY-300/25B	LGJ-300/25	63	12	40	110	110	25.5	0.6
SY-300/40B	LGJ-300/40	63	12	40	110	110	25.5	0.6
SY-400/20B	LGJ-400/20	63	13	45	120	110	28.5	0.7
SY-400/25B	LGJ-400/25	63	13	45	120	110	28.5	0.7
SY-400/35B	LGJ-400/35	63	13	45	120	110	28.5	0.7
SY-400/50B	LGJ-400/50	63	13	45	120	110	29.5	0.7
SY-500/35B	LGJ-500/35	80	16	52	130	90	31.5	1.0
SY-500/45B	LGJ-500/45	80	16	52	130	90	32.5	1.0
SY-500/65B	LGJ-500/65	80	16	52	130	90	32.5	1.0
SY-630/45B	LGJ-630/45	100	20	60	150	100	32.5	1.2
SY-630/55B	LGJ-630/55	100	20	60	150	100	36	1.2
SY-630/80B	LGJ-630/80	100	20	60	150	100	36.5	1.2
SY-800/55B	LGJ-800/55	125	22	65	170	125	40	2.1
SY-800/70B	LGJ-800/70	125	22	65	170	125	40.5	2.1
SY-800/100B	LGJ-800/100	125	22	65	170	125	40.5	2.1

注：1.线夹采用内光焊工艺制造，根据用户要求，铜铝过渡也可采用针焊工艺；
2.若用户所需线夹尺寸与表中不同，订货时请另注明。

SY系列设备线夹(压接型C类)

SY ALUMINIUM TERMINAL CONNECTING CAMP(COMPERSSIN TYPE C)

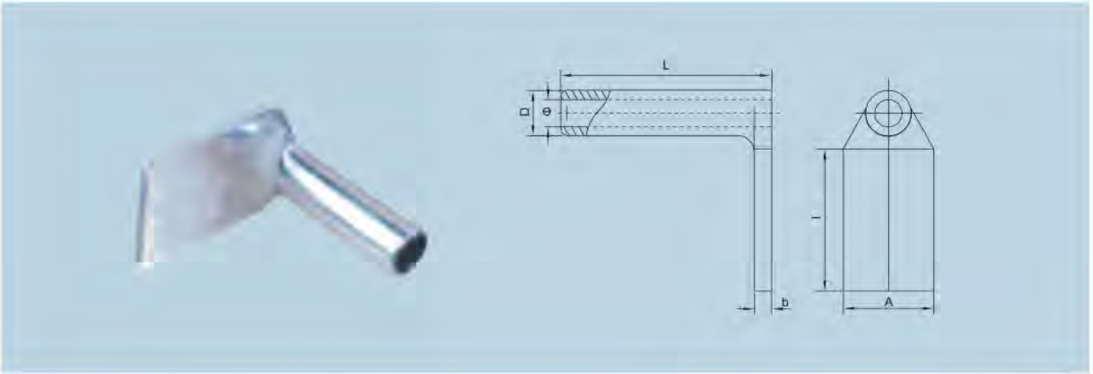

型号 Type	适用导线范围 Conductor		主要尺寸 Dimensions(mm)						重量 Wieght(kg)
	型号 Type	外径 (mm)	A	B	D	L	l	Φ	
SY-120/7C	LGJ-120/7C	14.5	50	10	26	115	80	16.0	0.22
SY-150/8C	LGJ-150/8C	16.00	50	10	30	125	80	17.5	0.28
SY-150/20C	LGJ-150/20C	16.67	50	10	30	125	80	18.0	0.27
SY-185/10C	LGJ-185/10C	18.00	50	12	32	125	80	19.5	0.32
SY-185/25C	LGJ-185/25C	18.90	50	12	32	125	80	20.5	0.31
SY-210/10C	LGJ-210/10C	19.00	50	12	34	135	80	20.5	0.36
SY-210/25C	LGJ-210/25C	19.88	50	12	34	135	80	21.5	0.35
SY-240/30C	LGJ-240/30C	21.60	50	12	36	135	80	23.0	0.38
SY-300/15C	LGJ-300/15C	23.01	63	16	40	145	100	24.5	0.61
SY-300/20C	LGJ-300/20C	23.43	63	16	40	145	100	25.0	0.60
SY-300/25C	LGJ-300/25C	23.76	63	16	40	145	100	25.5	0.59
SY-300/40C	LGJ-300/40C	23.94	63	16	40	145	100	25.5	0.59
SY-400/20C	LGJ-400/20C	26.91	63	16	45	155	100	28.5	0.70
SY-400/25C	LGJ-400/25C	26.64	63	16	45	155	100	28.5	0.70
SY-400/35C	LGJ-400/35C	26.82	63	16	45	155	100	28.5	0.70
SY-400/50C	LGJ-400/50C	27.63	63	16	45	155	100	29.5	0.68
SY-500/35C	LGJ-500/35C	30.00	80	16	52	165	80	31.5	0.91
SY-500/45C	LGJ-500/45C	30.00	80	16	52	165	80	31.5	0.90
SY-500/65C	LGJ-500/65C	30.96	80	16	52	165	100	32.5	0.89
SY-630/45C	LGJ-630/45C	33.60	100	20	60	185	100	35.5	1.52
SY-630/55C	LGJ-630/55C	34.32	100	20	60	185	100	36.0	1.50
SY-630/80C	LGJ-630/80C	34.82	100	20	60	185	100	36.5	1.49
SY-800/55C	LGJ-800/55C	38.40	125	22	65	210	125	40.0	2.25
SY-800/70C	LGJ-800/70C	35.58	125	22	65	210	125	40.5	2.20
SY-800/100C	LGJ-800/100C	38.98	125	22	65	210	125	40.5	2.20

注：1.线夹采用内光焊工艺制造，根据用户要求，铜铝过渡也可采用针焊工艺；
2.若用户所需线夹尺寸与表中不同，订货时请另注明。

SY(T)铜压接型设备线夹(压接型A、B型)

SY(T) COMPRESSION TERMINAL CONNECTOR (COMPERSSIN TYPE A,B)

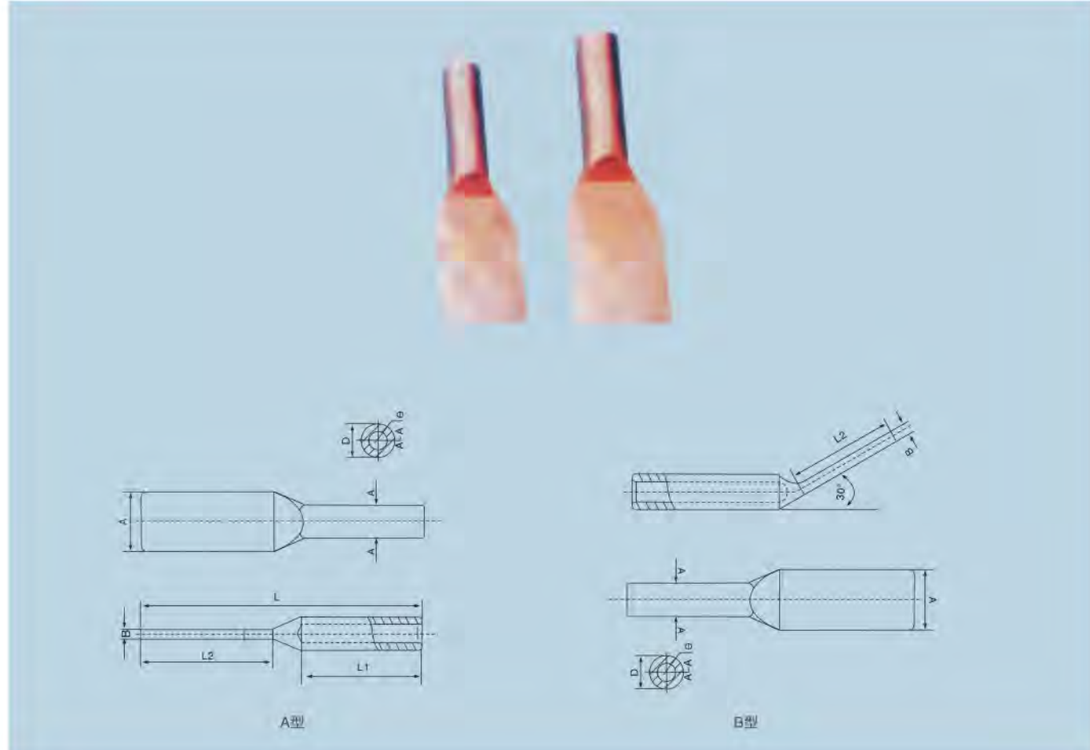

型号 Type	主要尺寸 Dimensions(mm)						
	D	Φ	A	B	L	L1	L2
SY(T)-95(A、B)	20	14.5	40	5.0	150	60	70
SY(T)-120(A、B)	22	16.0	40	5.0	160	65	70
SY(T)-150(A、B)	24	17.5	50	5.0	170	70	75
SY(T)-185(A、B)	27	19.5	50	6.3	180	75	80
SY(T)-240(A、B)	30	22	50	6.3	190	80	85
SY(T)-300(A、B)	32	24	60	8.0	210	90	90
SY(T)-400(A、B)	36	26.5	60	8.0	220	90	100
SY(T)-500(A、B)	40	30	80	8.0	230	100	100
SY(T)-630(A、B)	45	35	80	10.0	235	100	100
SY(T)-800(A、B)	50	38.5	100	12.5	270	110	120

注：1.线夹采用内光焊工艺制造，根据用户要求，铜铝过渡也可采用针焊工艺；
2.若用户所需线夹尺寸与表中不同，订货时请另注明。

SL85型铝设备线夹
SL85 ALUMINIUM TERMINAL CONNECTING CLAMP

型号 Type	适用导线外径 Conductor(mm²)	螺栓个数 Bolt number	主要尺寸 Dimensions(mm)				重量 Wieght(kg)
			A	B	L1	L	
SL-1A,B	35-50	4	40	6	65	145	0.34
SL-2A,B	70-95	4	40	6	80	175	0.36
SL-3A,B	120-150	6	50	8	125	225	0.48
SL-4A,B	185-240	6	50	8	125	225	0.51

注：1.附加字母A表示水平(0°)，B表示30°；
2.线夹本体为铝制件，其余为热镀锌钢制件；
3.若用户所需线夹尺寸与表中不同，订货时请另注明。

SL74型铝设备线夹
SL74 ALUMINIUM TERMINAL CONNECTING CLAMP

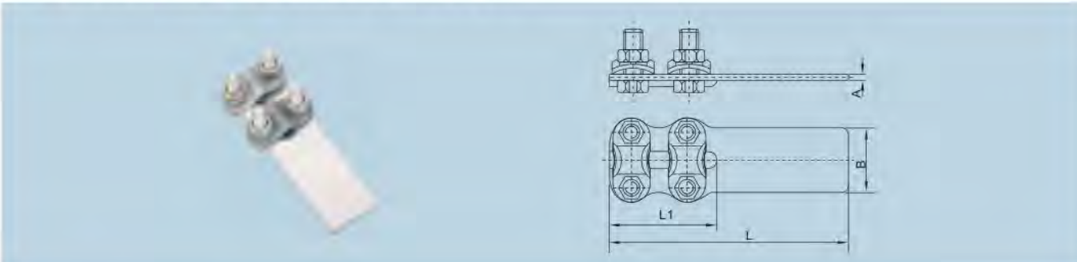

型号 Type	适用导线范围 Conductor	主要尺寸 Dimensions(mm)			
		B	A	L1	L
SL-1	35~50	40	6	65	120
SL-2	70~95	40	6	80	135
SL-3	35~50	40	6	65	145
SL-4	70~95	40	6	80	175
SL-5	120~150	50	8	125	225
SL-6	185~240	50	8	125	225
SL-7	120~150	80	8	125	239
SL-8	185~240	80	8	125	239

注：1.线夹本体为铝制件，其余为热镀锌钢制件；
2.若用户所需线夹尺寸与表中不同，订货时请另注明。

螺栓型铜铝过渡设备线夹
COPPER-ALUMINIUM TIANSITION TERMINAL CONNECTING CLAMP(BOLT TYPE)

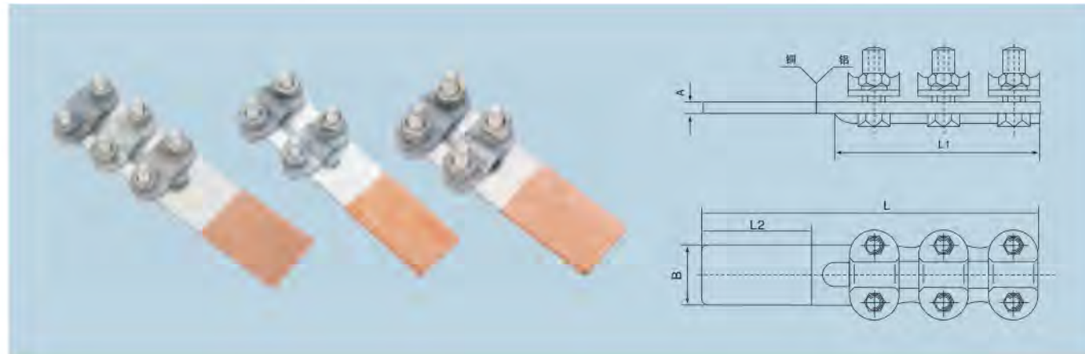

SLG铜铝设备线夹
SLG COPPER-TERMINAL CONNECTORS

型号 Type	适用导线外径 Conductor(mm²)	主要尺寸 Dimensions(mm)					重量 Wieght(kg)
		B	A	L1	L2	L	
SLG-1	35-50	40	5	65	65	145	0.37
SLG-2	70-90	40	5	80	80	175	0.37
SLG-3	120-150	50	6	125	85	225	0.43
SLG-4	185-240	50	6	125	85	225	0.43

注：1.附加字母A表示水平(0°)，B表示30°；
2.产品采用内光焊工艺或摩擦焊工艺制造，若客户要求，铜铝过渡也可采用钎焊工艺制造。

STL74型铜铝设备线夹
STL74 COPPER-TERMINAL CONNECTORS

型号 Type	适用导线 Conductor(mm²)	主要尺寸 Dimensions(mm)				
		B	A	L1	L2	L
STL-1	35~50	40	5	65	42	120
STL-2	70~95	40	5	80	45	136
STL-3	35~50	.40	5	65	65	145
STL-4	70~95	40	5	80	80	175
STL-5	120~150	50	6	125	85	225
STL-6	185~240	50	6	125	85	225
STL-7	120~150	80	6	125	85	230
STL-8	185~240	80	6	125	85	230

注：1.线夹本体为铜铝制件，其余为热镀锌钢制件；
2.产品采用内光焊工艺或摩擦焊工艺制造，若客户要求，铜铝过渡也可采用钎焊工艺制造。

ST系列螺栓型设备线夹、铜铝弓子卡
SL COPPER BOLT TYPR TERMINAL CONNECTING CLAMP

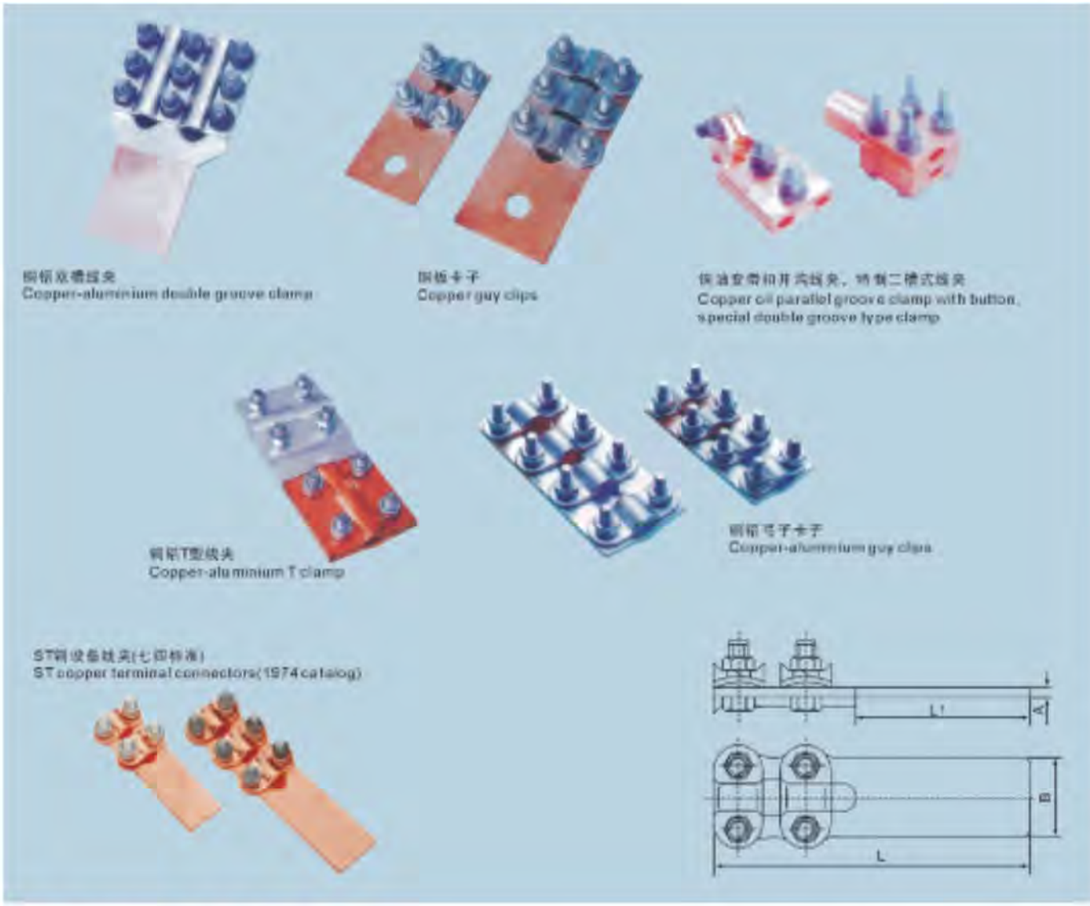

ST系列铜设备线夹(七四标准)
ST COPPER TERMINAL CONNECTORS(1974 STANDARD)

型号 Type	适用导线外径 Conductor(mm²)	主要尺寸 Dimensions(mm)			
		B	A	L1	L
ST-1(单孔)	35-50	40	4.2	65	120
ST-2(单孔)	70~95	40	4.2	80	135
ST-3(双孔)	35~50	40	4.2	65	145
ST-4(双孔)	70~95	40	4.2	80	175
ST-5(双孔)	120~150	50	5.0	125	225
ST-6(双孔)	185~240	50	5.0	125	225
ST-7(四孔)	120~150	80	5.2	125	230
ST-8(四孔)	185~240	80	5.2	125	230

注：1. 线夹本体和压板采用T2钢板冲制； 2. 若用户所需线夹尺寸与表中不同，订货时请另注明。

JT JTL JL 铜、铝、铜铝接线夹
COPPER ALUMINIUM, COPPER-ALIMINIUM JOINTING CLAMP

用途 Application

接线夹系列产品适用于户内配电装置中电气设备于各种电线、电缆的过渡连接。品种JT系列铜接线夹，JL系列铝接线夹，JTL系列铜铝接线夹。

The series of connecting clamps suit the transition connection of apparatus in the door switching equipment with various kinds of wires and cables here are quits a few sorts of connecting clamps, some of which are JT series of copper connecting clamps, JT series clamp aluminium, JTL series copper-aluminum.

外形及安装尺寸 Dimension drawings

型号 Type	Φ	L	L1	B	A
JT-100A	10.5	76	40	23	2.5
JT-200A	12.5	85	52	25	2.8
JT-300A	12.5	95	58	29	3
JT-400A	12.5	105	61	31	3.4
JT-500A	14.5	110	68	33	3.5
JT-600A	14.5	115	68	35	3.8
JT-800A	14.5	125	75	35	4
JT-1000A	14.5	136	75	40	4.2

型号 Type	Φ	L	L1	B	A
JTL-100A	10.5	76	40	23	3
JTL-200A	12.5	85	52	25	3.5
JTL-300A	12.5	95	58	29	3.8
JTL-400A	12.5	105	61	31	3.8
JTL-500A	14.5	110	68	33	4.2
JTL-600A	14.5	115	68	35	4.4
JTL-800A	14.5	125	75	35	4.5
JTL-1000A	14.5	136	75	40	4.8

型号 Type	Φ	L	L1	B	A
JL-100A	10.5	76	40	23	3.5
JL-200A	12.5	85	52	25	4
JL-300A	12.5	95	58	29	4.5
JL-400A	12.5	105	61	31	4.5
JL-500A	14.5	110	68	33	5
JL-600A	14.5	115	68	35	5
JL-800A	14.5	125	75	35	5.5
JL-1000A	14.5	136	75	40	6

梅花型黄铜接线夹
COPPER CONNECTING CLAMPS(WINTERSWEET TYPE)

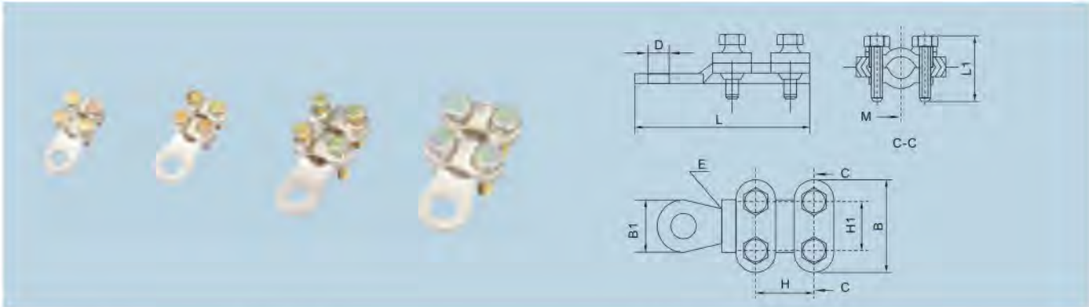

型号 Type	适用导线外径 Conductor(mm²)	主要尺寸 Dimensions(mm)							
		L	L1	B	B1	H	H1	D	b
WCJB-1	16~25	39.5	15	25	16.5	13	13	8.5	5
WCJB-2	16~25	45	15	22	18	13	13	8.5	5
WCJB-3	25~35	52.5	15	24.5	21.2	13.5	13.5	10.5	5
WCJB-4	50~70	61	21	31	23	18.5	18.5	10.5	6
WCJB-5	70~95	69	24	35	23.5	20	20	10.5	6
WCJB-6	95~120	74	20.5	42	28.5	22.5	22.5	13.5	7
WCJB-7	120~150	73.5	30	41	27	24	24	13.5	8
WCJB-8	150~185	76	30	42	28	24.5	24.5	13.5	8
WCJB-9	185~240	80	32	44	30	25	25	13.5	8

注：采用T2紫铜板制造，表面镀镍。
Note: it adopts T2 red copper, the surface adopt nickle plating.

梅花型黄铜接线夹
COPPER CONNECTING CLAMPS(WINTERSWEET TYPE)

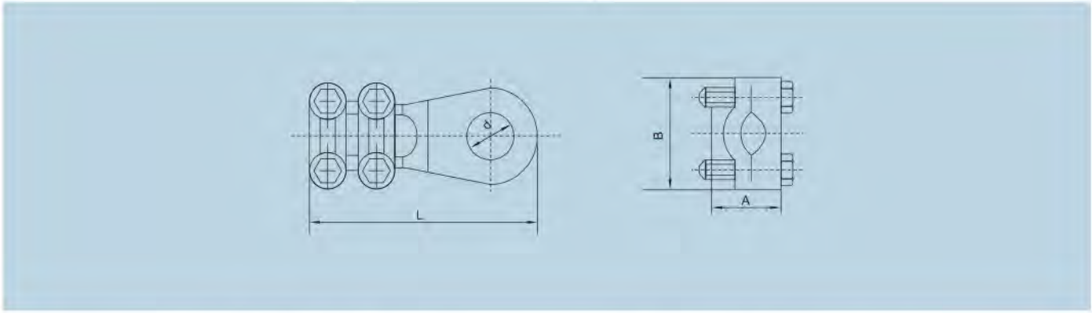

型号 Type	适用导线外径 Conductor(mm²)	主要尺寸 Dimensions(mm)			
		L	A	B	d
WCJB-1	16	37	10	21	7.5
WCJB-2	25~35	48	13	22	11
WCJB-3	50~70	60	17	31	11
WCJB-4	120~150	70	23	35	15
WCJB-5	210~250	90	30	46	17
WCJB-6	300~500	125	35	62	23

注：采用T2紫铜板制造，表面镀镍。
Note: it adopts T2 red copper, the surface adopt nickle plating.

Y2 带电装卸线夹
Y2 SPECIAL CLAMPS

型号 Type	适用母线型号		主要尺寸 Dimensions(mm)					重量 Weight(kg)
	母线	引下线	d1	d2	R	lo	h	
YZ-1	LGJ-35~50	GJ-25~70 LGJ-35~70	12	4	8	30	32	0.32
			12	4	12	40	40	0.40
YZ-3	LGJ-300~500		12	4	16	50	50	0.45

铜活动线夹
COPPER CONNECTING CLAMPS(WINTERSWEET TYPE)

型号 Type	适用母线型号 Bus model for		主要尺寸 Dimensions(mm)	
	母线	引下线	d	Φ
1	LGJ-35~50	LGJ-35~50	10.5	9
2	LGJ-75~95	LGJ-75~95	12.5	12
3	LGJ-120~150	LGJ-120~150	12.5	15

变压器用铜铝接线夹(特制带扣)
COPPER ALUMINIUM CLIP TERMINEL

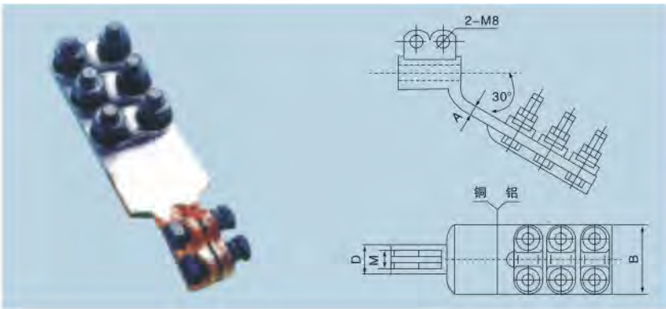

型号 Type	适用导杆螺纹 Conductor (mm)	主要尺寸 Dimensions(mm)			
		D	M	A	B
SBG-1-M12	12	22	12	6.7	50
SBG-1-M14	14	26	14	6.7	50
SBG-1-M16	16	26	16	7	50
SBG-1-M18	18	28	18	7.8	60
SBG-1-M20	20	30	20	7.8	60

注：1.线夹本体为铜铝，采用闪光焊工艺制造；
2.若用户要求线夹的出线角度不是30°，订货时请另注明。

变压器用铜接线夹(特制带扣)
COPPER CLIP TERMINEL

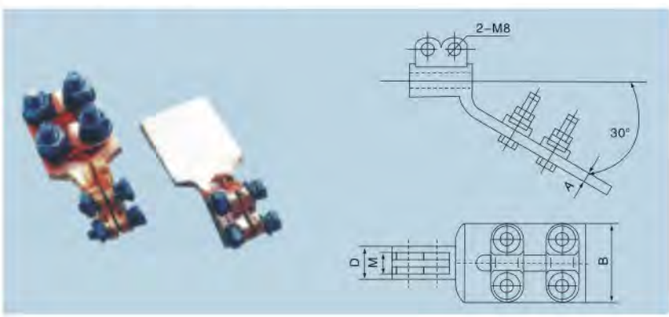

型号 Type	适用导杆螺纹 Conductor (mm)	主要尺寸 Dimensions(mm)			
		D	M	A	B
SBG-1-M12	12	22	12	6.5	50
SBG-1-M14	14	26	14	6.5	50
SBG-1-M16	16	26	16	6.5	50
SBG-1-M18	18	29	18	7.5	60
SBG-1-M20	20	31	20	7.5	60

注：1.线夹本体为铜铝，采用闪光焊工艺制造；
2.若用户要求线夹的出线角度不是30°，订货时请另注明。

铜铝螺纹线夹
COPPER ALUMINIUM THREAD CLAMP

型号 Type	适用导杆螺纹 Conductor (mm)	主要尺寸 Dimensions(mm)		
		M	D	L
SBG-1-M12	12	12	19	125
SBG-1-M14	14	14	21	140
SBG-1-M16	16	16	21	180
SBG-1-M18	18	18	24	200
SBG-1-M20	20	20	26	200

SBK-1 双孔型变压器用线夹
SBK-1 TRANSFORMER CLAMP (DOUBLE-HOLE)

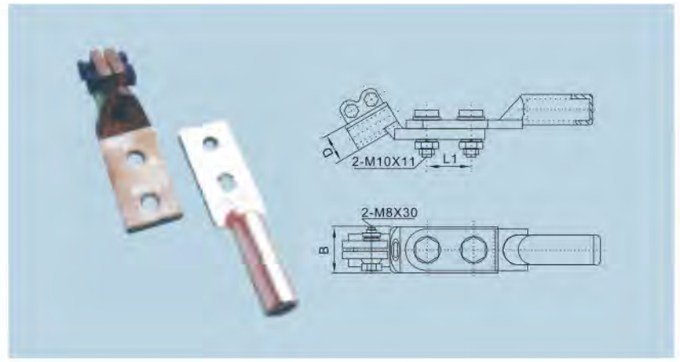

型号 Type	适用导杆螺纹 Conductor (mm)	主要尺寸 Dimensions(mm)			
		M	L1	B	D
SBK-1-M12	12	12	30	40	22
SBK-1-M14	14/16	16	30	40	26
SBK-1-M16	14/16	16	30	40	26
SBK-1-M18	18	18	30	50	29
SBK-1-M20	20	20	30	50	31

SBK-2 双孔型变压器用线夹
SBK-2 TRANSFORMER CLAMP (DOUBLE-HOLE)

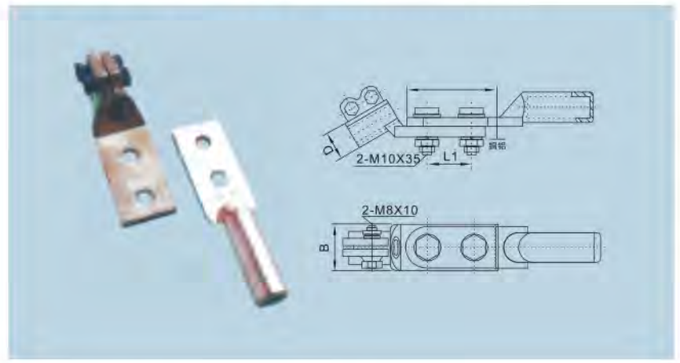

型号 Type	适用导杆螺纹 Conductor (mm)	主要尺寸 Dimensions(mm)			
		M	L1	L2	B
SBK-1-M12	12	12	30	65	40
SBK-1-M14	14/16	16	30	67	40
SBK-1-M16	14/16	16	30	67	40
SBK-1-M18	18	18	30	70	50
SBK-1-M20	20	20	30	70	50

SBK-3 双孔型变压器用线夹
SBK-3 TRANSFORMER CLAMP (DOUBLE-HOLE)

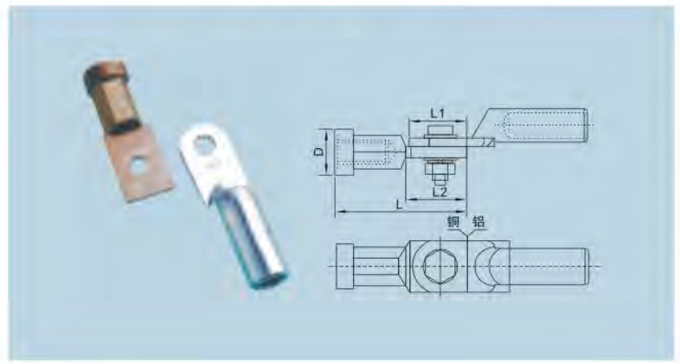

型号 Type	适用导杆螺纹 Conductor (mm)	主要尺寸 Dimensions(mm)			
		D	L	L1	L2
SBK-3-M12	12	32	98	45	40
SBK-3-M14	14/16	32	100	45	40
SBK-3-M16	14/16	32	100	45	40
SBK-3-M18	18	36	102	50	40
SBK-3-M20	20	36	102	50	40

SSY 双导线铝设备线夹(压缩型0°)

SSY TERMINAL CONNECTOR FOR DOUBLE-BUNDLE CONDUCTOR(COMPRESSION TYPE 0°)

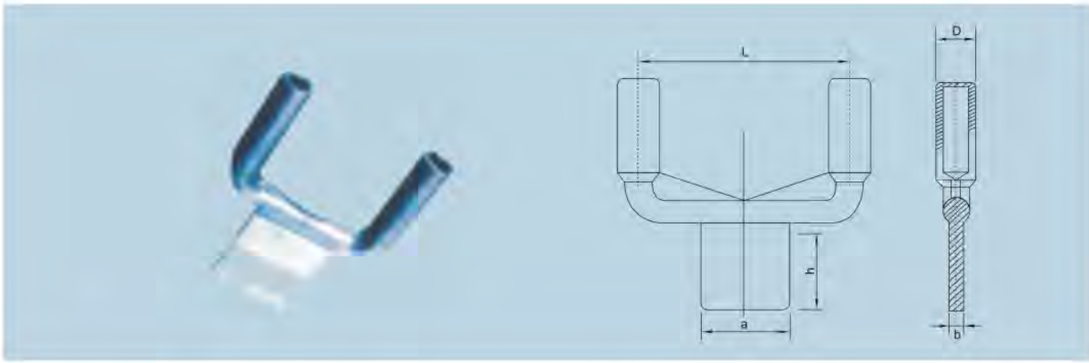

型号 Type	适用导线 Applicable wire	主要尺寸 Dimensions(mm)					重量 Wieght(kg)
		D	a	h	b	L	
SSY-240/40A-120	LGJ-240/30~40	36	80	85	14	120	1.60
SSY-300/40A-120	LGJ-300/25~40	40	100	105	16	120	1.90
SSY-400/35A-120	LGJ-400/35	45	100	105	16	120	2.10
SSY-400/50A-120	LGJ-400/50	45	100	105	16	120	2.10
SSY-500/65A-120	LGJ-500/65	52	125	130	20	120	2.30
SSY-240/40A-200	LGJ-500/30~40	36	80	85	14	200	1.80
SSY-300/40A-200	LGJ-300/25~40	40	100	105	16	200	1.90
SSY-400/35A-200	LGJ-400/35	45	100	105	16	200	2.55
SSY-400/50A-200	LGJ-400/50	45	100	105	16	200	2.55
SSY-500/65A-200	LGJ-500/5065	52	125	130	20	200	2.60
SSY-630/45A-200	LGJ-600/5045	60	125	130	20	200	3.30
SSY-630/55A-200	LGJ-630/55	60	125	130	20	200	3.30
SSY-800/55A-200	LGJ-800/55	65	150	155	22	200	3.50
SSY-300/40A-400	LGJ-300/25~40	40	100	105	16	400	2.70
SSY-400/35A-400	LGJ-400/35	45	100	105	16	400	3.00
SSY-400/50A-400	LGJ-400/50	45	100	105	16	400	3.00
SSY-500/45A-400	LGJ-500/35~45	52	125	130	20	400	3.20
SSY-500/65A-400	LGJ-500/65	52	125	130	20	400	3.30
SSY-630/45A-400	LGJ-630/45	60	125	130	20	400	4.10
SSY-630/55A-400	LGJ-630/55	60	125	130	20	400	4.10
SSY-800/55A-400	LGJ-800/55	65	150	155	22	400	4.50

注：订货时板尺寸与样本不同，请注明规格。
Note: AL cast parts: NB: during ordering, if required size is different from catalog details, pease indicate.

SSY 双导线铝设备线夹(压缩型30°)

SSY TERMINAL CONNECTOR FOR DOUBLE-BUNDLE CONDUCTOR(COMPRESSION TYPE 30°)

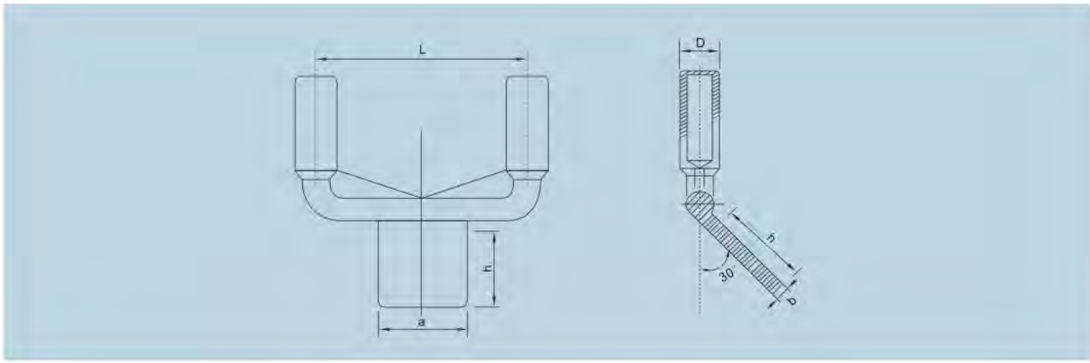

型号 Type	适用导线 Applicable wire	主要尺寸 Dimensions(mm)					重量 Wieght(kg)
		D	a	h	b	L	
SSY-240/40B-120	LGJ-240/30~40	36	80	85	14	120	1.60
SSY-300/40B-120	LGJ-300/25~40	40	100	105	16	120	1.90
SSY-400/35B-120	LGJ-400/35	45	100	105	16	120	2.10
SSY-400/50B-120	LGJ-400/50	45	100	105	16	120	2.10
SSY-500/65B-120	LGJ-500/65	52	125	130	20	120	2.30
SSY-240/40B-200	LGJ-240/30~40	36	80	85	14	200	1.80
SSY-300/40B-200	LGJ-300/25~40	40	100	105	16	200	1.90
SSY-400/35B-200	LGJ-400/35	45	100	105	16	200	2.55
SSY-400/50B-200	LGJ-400/50	45	100	105	16	200	2.55
SSY-500/65B-200	LGJ-500/5065	52	125	130	20	200	2.60
SSY-630/45B-200	LGJ-630/5045	60	125	130	20	200	3.30
SSY-630/55B-200	LGJ-630/55	60	125	130	20	200	3.30
SSY-800/55B-200	LGJ-800/55	65	150	155	22	200	3.50
SSY-300/40B-400	LGJ-300/25~40	40	100	105	16	400	2.70
SSY-400/35B-400	LGJ-400/35	45	100	105	16	400	3.00
SSY-400/50B-400	LGJ-400/50	45	100	105	16	400	3.00
SSY-500/45B-400	LGJ-500/35~45	52	125	130	20	400	3.20
SSY-500/65B-400	LGJ-500/65	52	125	130	20	400	3.30
SSY-630/45B-400	LGJ-630/45	60	125	130	20	400	4.10
SSY-630/55B-400	LGJ-630/55	60	125	130	20	400	4.10
SSY-800/55B-400	LGJ-800/55	65	150	155	22	400	4.50

注：订货时板尺寸与样本不同，请注明规格。
Note: AL cast parts: NB: during ordering, if required size is different from catalog details, pease indicate.

SSY 双导线铝设备线夹(压缩型90°)

SSY TERMINAL CONNECTOR FOR DOUBLE-BUNDLE CONDUCTOR(COMPRESSION TYPE 90°)

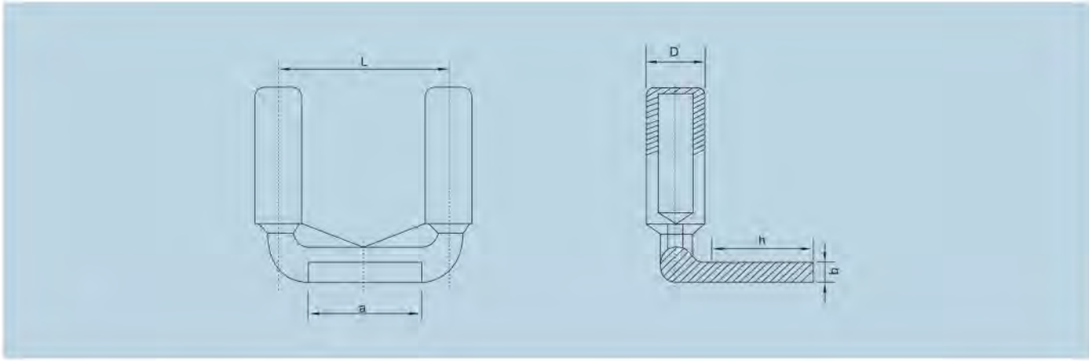

型号 Type	适用导线 Applicable wire	主要尺寸 Dimensions(mm)					重量 Wieght(kg)
		D	a	h	b	L	
SSY-240/40C-120	LGJ-240/30~40	36	80	85	14	120	1.60
SSY-300/40C-120	LGJ-300/25~40	40	100	105	16	120	1.90
SSY-400/35C-120	LGJ-400/35	45	100	105	16	120	2.10
SSY-400/50C-120	LGJ-400/50	45	100	105	16	120	2.10
SSY-500/65C-120	LGJ-500/65	52	125	130	20	120	2.30
SSY-240/40C-200	LGJ-500/30~40	36	80	85	14	200	1.80
SSY-300/40C-200	LGJ-300/25~40	40	100	105	16	200	1.90
SSY-400/35C-200	LGJ-400/35	45	100	105	16	200	2.55
SSY-400/50C-200	LGJ-400/50	45	100	105	16	200	2.55
SSY-500/65C-200	LGJ-500/5065	52	125	130	20	200	2.60
SSY-630/45C-200	LGJ-600/5045	60	125	130	20	200	3.30
SSY-630/55C-200	LGJ-630/55	60	125	130	20	200	3.30
SSY-800/55C-200	LGJ-800/55	65	150	155	22	200	3.50
SSY-300/40C-400	LGJ-300/25~40	40	100	105	16	400	2.70
SSY-400/35C-400	LGJ-400/35	45	100	105	16	400	3.00
SSY-400/50C-400	LGJ-400/50	45	100	105	16	400	3.00
SSY-500/45C-400	LGJ-500/35~45	52	125	130	20	400	3.20
SSY-500/65C-400	LGJ-500/65	52	125	130	20	400	3.30
SSY-630/45C-400	LGJ-630/45	60	125	130	20	400	4.10
SSY-630/55C-400	LGJ-630/55	60	125	130	20	400	4.10
SSY-800/55C-400	LGJ-800/55	65	150	155	22	400	4.50

注：订货时板尺寸与样本不同，请注明规格。
Note: AL cast parts: NB: during ordering, if required size is different from catalog details, pease indicate.

SYS双导线铝设备线夹(压缩型、螺栓型)

SYS COPPER-ALUMINIUM TRANSITION TERMINAL CONNECTING CLAMP

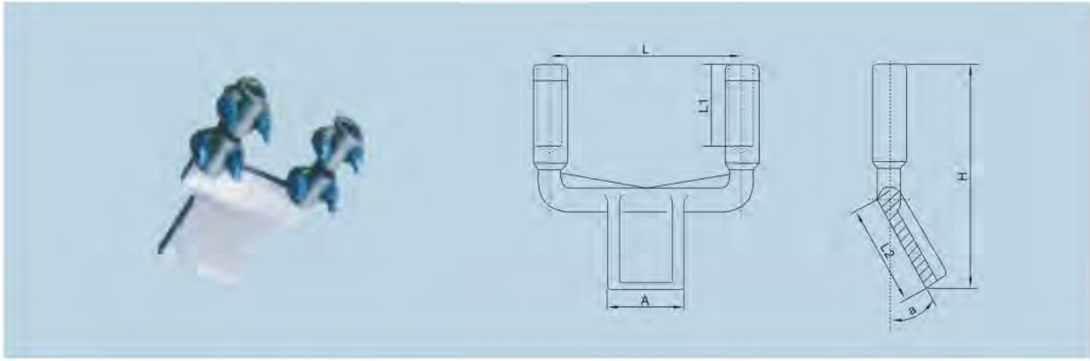

型号 Type	适用导线 Applicable wire	主要尺寸 Dimensions(mm)					
		L1	α	A	L2	H	L
SYS-300/120A	LGJ-300	110	0°	100	110	296	120
SYS-300/120B	LGJ-300	110	30°	100	110	288	120
SYS-300/200A	LGJ-300	160	0°	100	120	293	200
SYS-300/200B1	LGJ-300	160	45°	100	100	258	200
SYS-300/200C	LGJ-300	160	90°	100	120	185	200
SYS-400/200A-1	LGJ-400	120	0°	120	130	325	120
SYS-400/120A	LGJ-400	160	0°	120	130	315	200
SYS-400/200B1	LGJ-400	160	45°	120	130	275	200
SYS-400/200C	LGJ-400	160	90°	120	135	195	200
SYS-500/35	LGJ-500/35	160	0°	110	110	356	400
SYS-500/45	LGJ-500/45	160	0°	110	110	356	400
SYS-500/55	LGJ-500/55	160	0°	110	110	356	400
SYS-630/45	LGJ-630/45	160	0°	115	115	376	400
SYS-630/55	LGJ-630/55	160	0°	115	115	376	400
SYS-630/80	LGJ-630/80	160	0°	115	115	376	400
SYS-800/55	LGJ-800/55	160	0°	125	125	401	400
SYS-800/70	LGJ-800/70	160	0°	125	125	401	400
SYS-800/100	LGJ-800/100	160	0°	125	125	401	400
SYS-1144A/400/100	NAHLGJQ-1144	150	0°	100	170	329	400
SYS-1144A/400/134	NAHLGJQ-1144	150	0°	134	125	284	400

注：1. 附加字母A表示水平(0°)，B1表示45° ，C表示90°
2. 线夹本体和压盖为AL99.5的铝铸件；
3. 若用户所需的线夹尺寸与表中不同，订货时请另注明。

SSYG双导线压缩型铜铝过渡设备线夹(钎焊)

SSYG TERMINAL CONNECTOR FOR DOUBLE-BUNDLE CONDUCTOR (COMPRESSION)

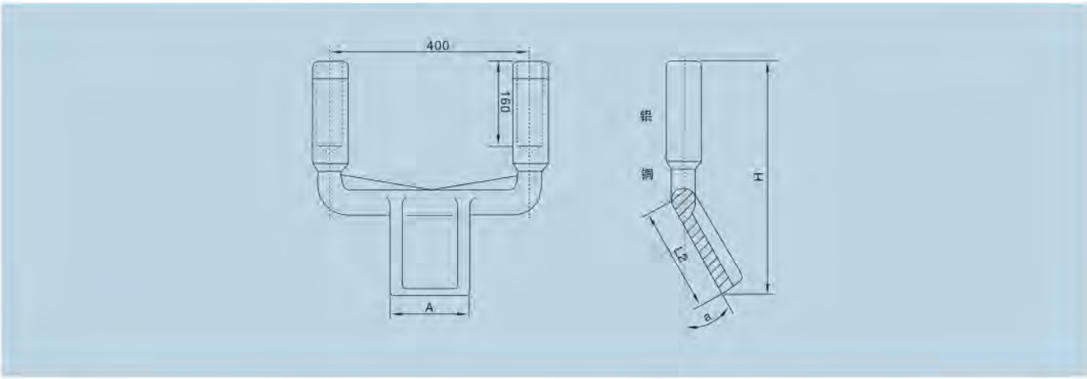

型号 Type	适用导线 Applicable wire	主要尺寸 Dimensions(mm)				重量 Weight(kg)	备注 Note.
		α	A	L2	H		
SSYG-600KA-42	LGKK-600	0°	120	120	442	10.6	带芯棒
SSYG-600KB-41		30°	100	100	419	10.7	
SSYG-600KB1-42		45°	120	120	400	10.6	
SSYG-600KC1-42		90°	120	120	312	10.4	
SSYG-600KB-43		30°	145	130	445	11.3	
SSYG-600KB1-45		45°	16	160	428	11.4	
SSYG-600KC-46		90°	180	120	312	11.4	
SSYG-600KA-43		0°	156	130	452	10.8	
SSYG-600KB-42		30°	120	120	436	11.0	
SSYG-KB1-43		45°	145	130	407	10.7	
SSYG-600KC-43		90°	145	120	312	10.9	
SSYG-600KA-47		0°	220	125	42	11.3	
SSYG-KB-45		30°	160	150	462	11.8	
SSYG-600KB1-46	LGJQT-1400	45°	150	110	492	11.0	
SSYG-600KA-48		0°	340	120	442	12.6	
SSYG-600KB-46		30°	180	110	428	11.0	
SSYG-600KB-47		30°	220	195	501	13.2	
SSYG-600KB-47		90°	220	125	312	11.5	
SSYG-600KB1-48		45°	340	120	400	12.4	
SSYG-600KBC-48		90°	340	120	312	13.1	
SSYG-1400A-42		0°	120	120	442	7.5	
SSYG-1400B-41		30°	100	100	419	7.5	
SSYG-1400B-42		30°	120	120	436	7.9	
SSYG-1400B1-42		45°	120	120	400	7.4	
SSYG-1400C-42		90°	120	120	312	7.4	
SSYG-1400A-43		0°	145	130	452	7.7	
SSYG-1400B-43		30°	145	130	445	8.2	
SSYG-14001-43		45°	145	130	407	7.6	
SSYG-1400C-43		90°	145	120	312	7.9	
SSYG-1400A-45		0°	160	185	480	8.7	
SSYG-1400B-45		30°	160	150	462	8.7	
SSYG-1400B1-45		45°	160	160	428	8.3	
SSYG-1400C-46		90°	180	120	312	8.4	
SSYG-1400A-47		0°	220	125	442	8.2	
SSYG-1400B-46		30°	180	110	428	8.5	
SSYG-1400B-47		30°	220	195	501	10.3	
SSYG-1400C-47		90°	220	125	312	9.9	
SSYG-1400B1-46		45°	180	110	392	7.9	
SSYG-1400A-48		0°	340	120	442	9.7	
SSYG-1400B1-48		45°	340	120	400	9.4	
SSYG-1400C-48		90°	340	120	312	10.2	
SSYG-1400NA-43	NAHLGJ-1440	0°	145	135	562	10.6	孔深240
SSYG-1400NB-43	NAHLGJ-1440	30°	145	135	540	10.6	孔深240

注：1. 附加字母A表示水平(0°)，B1表示45°，C表示90°
2. 线夹本体和压盖为AL99.5的铝铸件；
3. 若用户所需的线夹尺寸与表中不同，订货时请另注明。

双导线铜铝过渡设备线夹(压缩型0°、钎焊)

ALUMINIUM-COPPER TERMINAL CONNECTOR FOR DOUBLE-BUNDLE CONDUCTOR (COMPERESSION TYPE 0°)

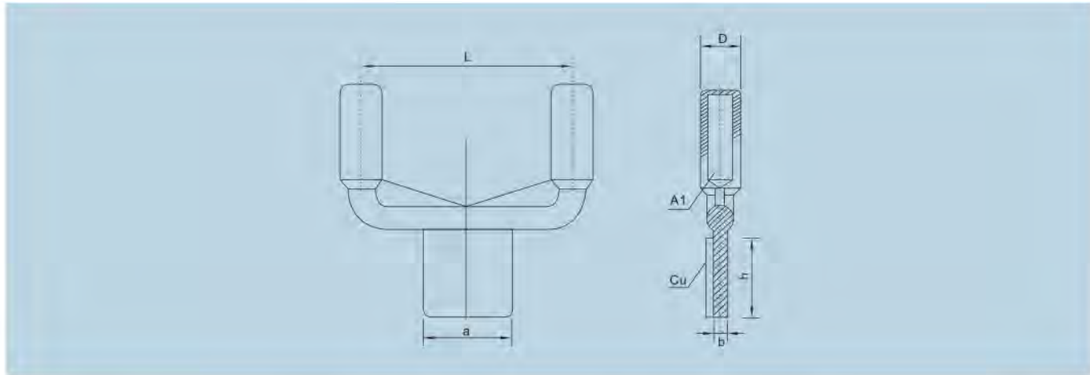

型号 Type	适用导线 Applicable wire	主要尺寸 Dimensions(mm)					重量 Weight(kg)
		D	a	h	b	L	
SSYG-240/40A-120	LGJ-240/30-40	36	80	85	14	120	1.80
SSYG-300/40A-120	LGJ-300/25-40	40	100	105	16	120	2.00
SSYG-400/35A-120	LGJ-400/35	45	100	105	16	120	2.45
SSYG-400/50A-120	LGJ-400/50	45	100	105	16	120	2.45
SSYG-500/65A-120	LGJ-500/65	52	125	130	20	120	2.60
SSYG-240/40A-200	LGJ-240/30-40	36	80	85	14	200	2.10
SSYG-300/40A-200	LGJ-300/25-40	40	100	105	16	200	2.20
SSYG-400/35A-200	LGJ-400/35	45	100	105	16	200	2.85
SSYG-400/50A-200	LGJ-400/50	45	100	105	16	200	2.85
SSYG-500/65A-200	LGJ-500/65	52	125	130	20	200	2.85
SSYG-630/45A-200	LGJ-630/45	60	125	130	20	200	3.70
SSYG-630/55A-110	LGJ-630/55	60	125	130	20	200	3.70
SSYG-800/55A-200	LGJ-800/55	65	150	155	22	200	3.90
SSYG-300/40A-400	LGJ-300/25-400	40	100	105	16	400	3.10
SSYG-400/35A-400	LGJ-400/35	45	100	105	16	400	3.40
SSYG-400/50A-400	LGJ-400/50	45	100	105	16	400	3.40
SSYG-500/45A-400	LGJ-500/35-45	52	125	130	20	400	3.60
SSYG-500/65A-400	LGJ-500/65	52	125	130	20	400	3.70
SSYG-630/45A-400	LGJ-630/45	60	125	130	20	400	4.40
SSYG-630/55A-400	LGJ-630/55	60	125	130	20	400	4.40
SSYG-800/55A-400	LGJ-800/55	65	150	155	22	400	4.70

注：1. 附加字母A表示水平(0°)，B1表示45°，C表示90°
2. 线夹本体和压盖为AL99.5的铝铸件；
3. 若用户所需的线夹尺寸与表中不同，订货时请另注明。

双导线铜铝过渡设备线夹(压缩型30°、钎焊)

ALUMINIUM-COPPER TERMINAL CONNECTOR FOR DOUBLE-BUNDLE CONDUCTOR (COMPERESSION TYPE 30°)

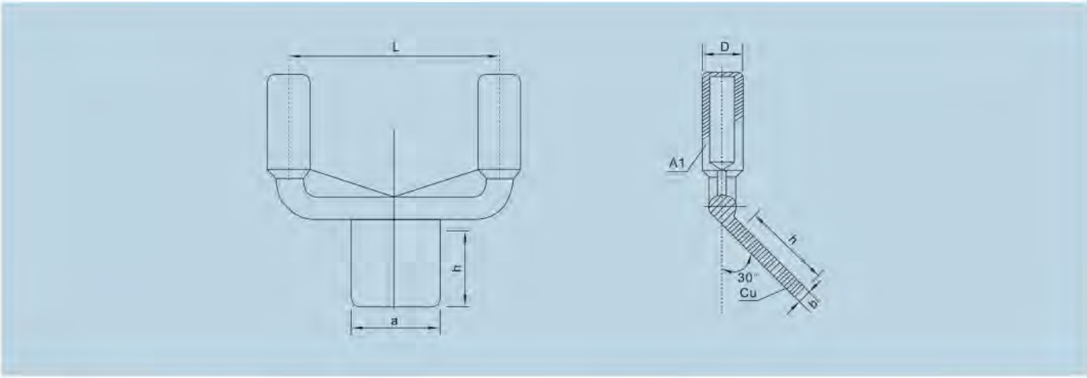

型号 Type	适用导线 Applicable wire	主要尺寸 Dimensions(mm)					重量 Weight(kg)
		D	a	h	b	L	
SSYG-240/40B-120	LGJ-240/30~40	36	80	85	14	120	1.80
SSYG-300/40B-120	LGJ-300/25~40	40	100	105	16	120	2.00
SSYG-400/35B-120	LGJ-400/35	45	100	105	16	120	2.45
SSYG-400/50B-120	LGJ-400/50	45	100	105	16	120	2.45
SSYG-500/65B-120	LGJ-500/65	52	125	130	20	120	2.60
SSYG-240/40B-200	LGJ-240/30~40	36	80	85	14	200	2.10
SSYG-300/40B-200	LGJ-300/25~40	40	100	105	16	200	2.20
SSYG-400/35B-200	LGJ-400/35	45	100	105	16	200	2.85
SSYG-400/50B-200	LGJ-400/50	45	100	105	16	200	2.85
SSYG-500/65B-200	LGJ-500/65	52	125	130	20	200	2.85
SSYG-630/45B-200	LGJ-630/45	60	125	130	20	200	3.70
SSYG-630/55B-110	LGJ-630/55	60	125	130	20	200	3.70
SSYG-800/55B-200	LGJ-800/55	65	150	155	22	200	3.90
SSYG-300/40B-400	LGJ-300/25~400	40	100	105	16	400	3.10
SSYG-400/35B-400	LGJ-400/35	45	100	105	16	400	3.40
SSYG-400/50B-400	LGJ-400/50	45	100	105	16	400	3.40
SSYG-500/45B-400	LGJ-500/35~45	52	125	130	20	400	3.60
SSYG-500/65B-400	LGJ-500/65	52	125	130	20	400	3.70
SSYG-630/45B-400	LGJ-630/45	60	125	130	20	400	4.40
SSYG-630/55B-400	LGJ-630/55	60	125	130	20	400	4.40
SSYG-800/55B-400	LGJ-800/55	65	150	155	22	400	4.70

注：1. 附加字母A表示水平(0°)，B1表示45° ，C表示90°
2. 线夹本体和压盖为AL99.5的铝铸件；
3. 若用户所需的线夹尺寸与表中不同，订货时请另注明。

双导线铜铝过渡设备线夹(压缩型90°、钎焊)

ALUMINIUM-COPPER TERMINAL CONNECTOR FOR DOUBLE-BUNDLE CONDUCTOR (COMPERESSION TYPE 90°)

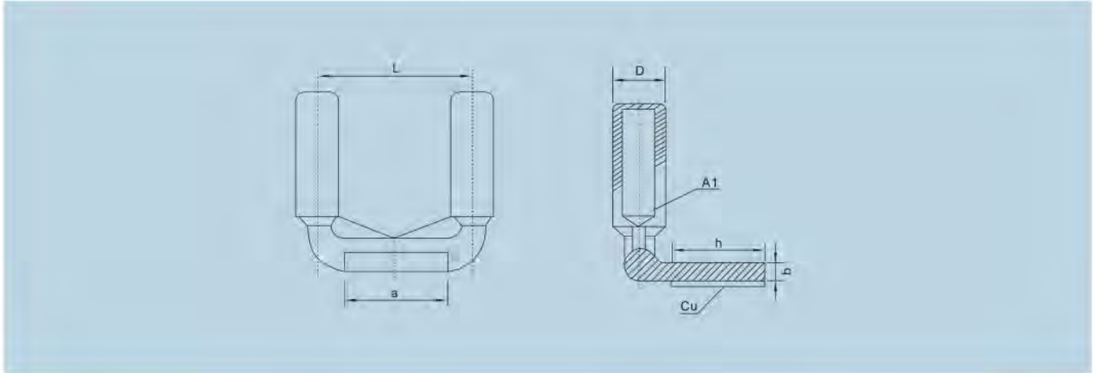

型号 Type	适用导线 Applicable wire	主要尺寸 Dimensions(mm)					重量 Weight(kg)
		D	a	h	b	L	
SSYG-240/40C-120	LGJ-240/30~40	36	80	85	14	120	1.80
SSYG-300/40C-120	LGJ-300/25~40	40	100	105	16	120	2.00
SSYG-400/35C-120	LGJ-400/35	45	100	105	16	120	2.45
SSYG-400/50C-120	LGJ-400/50	45	100	105	16	120	2.45
SSYG-500/65C-120	LGJ-500/65	52	125	130	20	120	2.60
SSYG-240/40C-200	LGJ-240/30~40	36	80	85	14	200	2.10
SSYG-300/40C-200	LGJ-300/25~40	40	100	105	16	200	2.20
SSYG-400/35C-200	LGJ-400/35	45	100	105	16	200	2.85
SSYG-400/50C-200	LGJ-400/50	45	100	105	16	200	2.85
SSYG-500/65C-200	LGJ-500/65	52	125	130	20	200	2.85
SSYG-630/45C-200	LGJ-630/45	60	125	130	20	200	3.70
SSYG-630/55C-110	LGJ-630/55	60	125	130	20	200	3.70
SSYG-800/55C-200	LGJ-800/55	65	150	155	22	200	3.90
SSYG-300/40C-400	LGJ-300/25~400	40	100	105	16	400	3.10
SSYG-400/35C-400	LGJ-400/35	45	100	105	16	400	3.40
SSYG-400/50C-400	LGJ-400/50	45	100	105	16	400	3.40
SSYG-500/45C-400	LGJ-500/35-45	52	125	130	20	400	3.60
SSYG-500/65C-400	LGJ-500/65	52	125	130	20	400	3.70
SSYG-630/45C-400	LGJ-630/45	60	125	130	20	400	4.40
SSYG-630/55C-400	LGJ-630/55	60	125	130	20	400	4.40
SSYG-800/55C-400	LGJ-800/55	65	150	155	22	400	4.70

注：1. 附加字母A表示水平(0°)，B1表示45° ，C表示90°
2. 线夹本体和压盖为AL99.5的铝铸件；
3. 若用户所需的线夹尺寸与表中不同，订货时请另注明。

变电金具
POWERSTATION FITTING

铜铝过渡板母线伸缩节
Conpper to aluminium adapter board and power shunts

铝、铜铝母线伸缩节用于变电所电所铝母线间的连接、铜铝母线伸缩节用于变电所铜、铝母线间的连接、铜铝伸缩节产品采用闪光焊接工艺制造。

铜铝过渡板适用于铜母线与铝母线的过渡连接，产品采用闪光焊工艺或摩擦焊工艺制造。

产品型号中字母数字的意义为：M为母线　S伸缩节　SS铜铝过渡伸缩节　ST 全铜伸缩节。

数字表示产品的宽度和厚度。

Aluminium, copper-aluminium bus-bar power shunts is used for the conjunction of leading down wires to each other, copper bus-bars and aluminium bus-bars in substation. Copper-aluminium expansion burls are produced in the technology of flash welding. Copper-aluminium transition plates are suitable for the transitional conjunction of copper bus-bars and aluminium bus-bars, which are made by the technology of flash welding or friction welding.

Additional letters mean: M: bus-bar　S: expansion burl　SS: copper-aluminium transition expansion burl　ST: all-copper expansion burl.

Digital presemtation product and thickmess.

MG铜铝过渡板(闪光焊)
MG COPPER TO ALUMINIUM ADAPTER BOARD

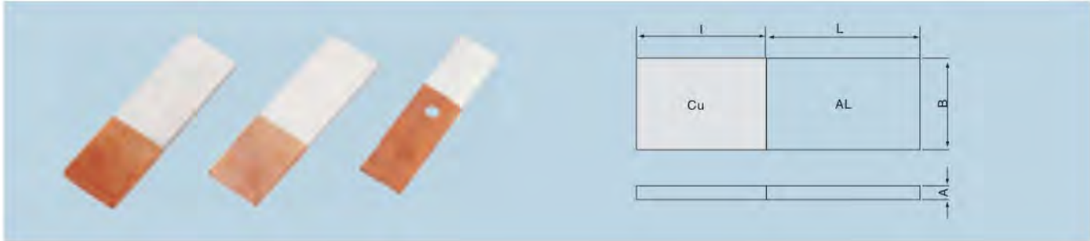

型号 Type	母线宽度 Bus width (mm)	主要尺寸 Dimensions(mm)			
		B	A	I	L
MG-50×5	50×5	50	5	50	60
MG-63×6.3	63×63.3	63	6.3	68	85
MG-63×8	63×8	63	8	68	85
MG-63×10	63×10	63	10	68	85
MG-80×6.3	80×6.3	80	6.3	85	100
MG-80×8	80×8	80	8	85	100
MG-80×10	80×10	80	10	85	100
MG-100×8	100×8	100	8	105	120
MG-100×10	100×10	100	10	105	120
MG-125×8	125×8	125	8	130	140
MG-125×10	125×10	125	10	130	140
MG-125×12.5	125×12.5	125	12.5	130	140

MG铜铝过渡板(钎焊)
MG COPPER TO ALUMINIUM ADAPTER BOARD

型号 Type	母线宽度 Bus width (mm)	主要尺寸 Dimensions(mm)				重量 Weight(kg)
		B	A	I	L	
MG-50×5Q	50×5	50	5	50	60	0.15
MG-63×6.3Q	63×63.3	63	6.3	68	85	0.33
MG-63×8Q	63×8	63	8	68	85	0.42
MG-63×10Q	63×10	63	10	68	85	0.53
MG-80×6.3Q	80×6.3	80	6.3	85	100	0.52
MG-80×8Q	80×8	80	8	85	100	0.66
MG-80×10Q	80×10	80	10	85	100	0.82
MG-100×8Q	100×8	100	8	105	120	1.01
MG-100×10Q	100×10	100	10	105	120	1.26
MG-125×8Q	125×8	125	8	130	140	1.54
MG-125×10Q	125×10	125	10	130	140	1.92
MG-125×12.5Q	125×12.5	125	12.5	130	140	2.40

MS 铝母线伸缩节(母线与母线连接)

MS ALUMINIUM POWER SHUNTS (BUS-BARS CONNECT WITH EACH OTHERS)

型号 Type	主要尺寸 Dimensions(mm)					重量 Weight(kg)
	a	b	h	L1	L2	
MS-63×6.3	63	6.3	50	73	170	0.39
MS-80×6.3	80	6.3	50	90	170	0.53
MS-80×8	80	8	50	90	170	0.70
MS-100×8	100	8	50	115	170	0.99
MS-100×10	100	10	50	115	190	1.31
MS-125×8	125	8	50	140	170	1.37
MS-125×10	125	10	60	140	190	1.80
MS-125×12.5	125	12.5	60	140	190	2.10

MSS 铜铝母线伸缩节(母线与设备连接)

MSS COPPER-ALUMINIUM POWER SHUNTS (BUS-BARS CONNECT WITH EACH OTHERS)

型号 Type	主要尺寸 Dimensions(mm)						重量 Weight(kg)
	a	b	h	L1	L2	L3	
MSS-63×6.3	63	6.3	50	73	170	73	0.55
MSS-80×6.3	80	6.3	50	90	170	90	0.79
MSS-80×8	80	8	50	90	170	90	1.05
MSS-100×8	100	8	50	115	170	115	1.54
MSS-100×10	100	10	50	115	190	115	2.01
MSS-125×8	125	8	50	140	170	140	2.22
MSS-125×10	125	10	60	140	190	140	2.87
MSS-125×12.5	125	12.5	60	140	190	140	3.43

MST铜母线伸缩节

MST COPPER POWER SHUNTS

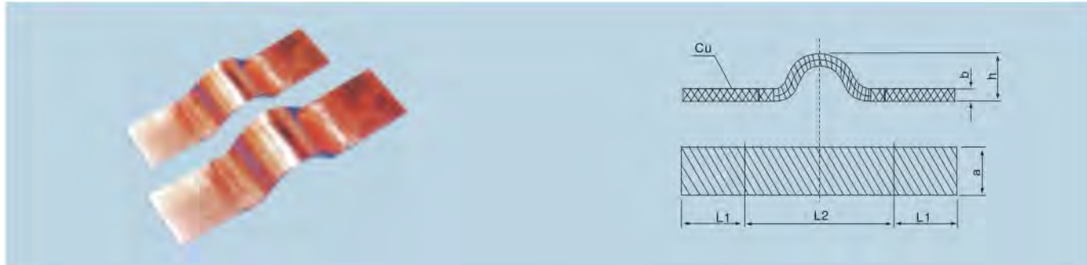

型号 Type	主要尺寸 Dimensions(mm)				
	a	b	h	L1	L2
MST-63×6.3	63	6.3	50	73	170
MST-80×6.3	80	6.3	50	90	170
MST-80×8	80	8	50	90	170
MST-100×8	100	8	50	115	170
MST-100×10	100	10	50	115	190
MST-125×8	125	8	50	140	170
MST-125×10	125	10	60	140	190
MST-125×12.5	125	12.5	60	140	190

MGS 型铝管母线伸缩节

FLEXIBLE STUD CONNECTORS(TYPE MGS)

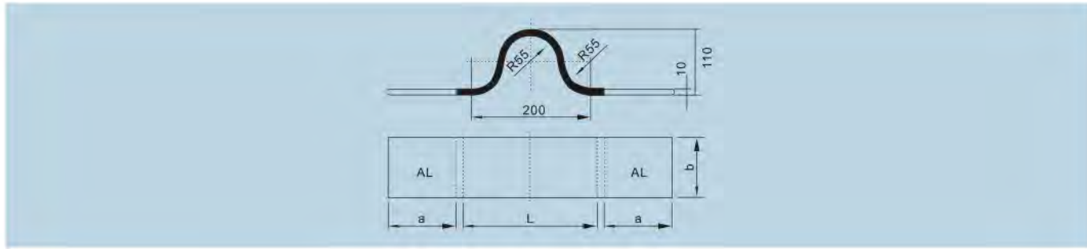

型号 Type	适用母线 Suitable conductor	主要尺寸 Dimensions(mm)			200展开长度 Length	重量 Weight(kg)
		L	b	a		
MGS-80×10	ϕ70	290	80	90	314	0.9
MGS-80×10	ϕ80		80	90		0.9
MGS-100×10	ϕ100		100	115		1.4
MGS-125×10	ϕ130		125	140		2.0
MGS-125×10	ϕ150		125	140		2.0

MSC型铜铝槽型母线伸缩节
CHANNEL BUS-BAR FLEXIBLE STUD CONNECTORS(TYPE MSC)

型号 Type	主要尺寸 Dimensions(mm)								重量 Weight(kg)
	b	a	S	h	a1	L	a2	H	
MSC-150-1	150	70	8		170	190	170	60	1.75
MSC-150-2	150	70	8		170	130	170	60	1.60
MSC-150-3	150	70	8		110	190	170	75	2.30
MSC-150-4	150	70	8	45	110	130	170	75	2.00
MSC-150-5	150	70	8	45	110	330	170	60	2.70
MSC-200-1	200	90	12		170	190	170	60	3.50
MSC-200-2	200	90	12		170	130	170	60	3.20
MSC-200-3	200	90	12		120	190	170	75	5.10
MSC-200-4	200	90	12	15	120	130	170	75	4.70
MSC-200-5	200	90	12	15	120	330	170	60	5.80

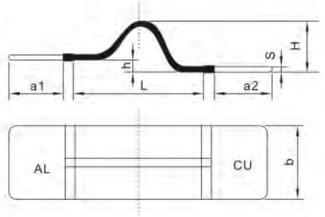

MGS 型管母线伸缩节
TUBLAR BUS-BAR EXPANSION JOINT(TYPE MGS)

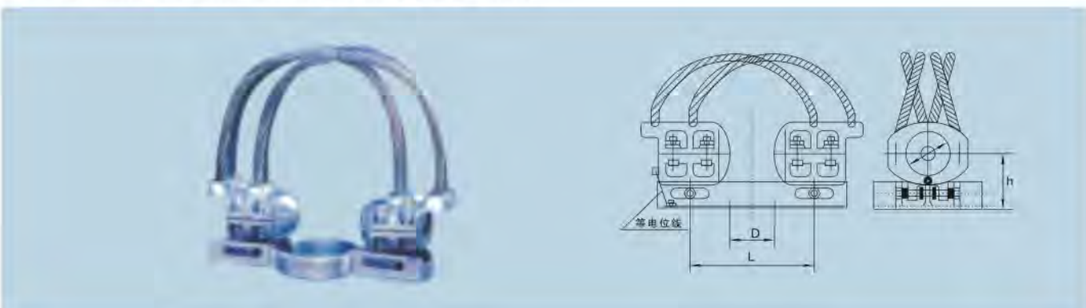

型号 Type	适用母线 Suitable conductor	主要尺寸 Dimensions(mm)				重量 Weight(kg)
		ϕ	D	L	h	
MGS-50	ϕ50	50	140	350	90	32.6
MGS-60	ϕ60	60	140	350	100	32.6
MGS-70	ϕ70	70	140	350	110	32.6
MGS-80	ϕ80	80	140	350	115	35.5
MGS-85	ϕ85	85	140	350	120	35.5
MGS-90	ϕ90	90	140	400	125	36.5
MGS-100	ϕ100	100	140	400	135	37.7
MGS-110	ϕ110	110	140	400	145	40.5
MGS-120	ϕ120	120	140	450	145	43.5
MGS-130	ϕ130	130	140	450	155	45.0
MGS-100(225)	ϕ100	100	225	400	135	38.3
MGS-110(225)	ϕ110	110	225	400	145	41.5
MGS-120(225)	ϕ120	120	225	450	145	42.5
MGS-130(225)	ϕ130	130	225	450	155	46.0
MGS-150	ϕ150	150	225	450	160	47.5
MGS-170	ϕ170	170	225	500	180	50.0
MGS-200	ϕ200	200	225	500	210	52.5
MGS-150(250)	ϕ150	150	225	480	160	49.0
MGS-170(250)	ϕ170	170	225	530	180	52.3
MGS-200(250)	ϕ200	200	225	530	210	55.0

注：底座为钢件，主体为铝件，其余为镀锌钢件。

MSZD 型支撑式管母线单伸缩线夹
SINGLE EXPANSION CLAMP FOR TUBLAR BUS-BAR(TYPE MSZD)

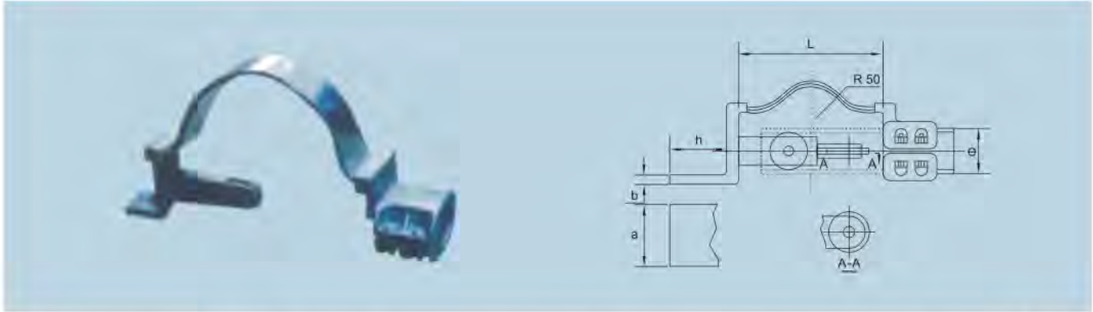

型号 Type	适用母线 Suitable conductor	主要尺寸 Dimensions(mm)					重量 Weight(kg)
		ϕ	L	a	h	b	
MSZD-50	ϕ50	50	460	50	85	16	6.0
MSZD-60	ϕ60	60	460	80	85	16	6.5
MSZD-70	ϕ70	70	470	80	85	16	6.5
MSZD-80	ϕ80	80	470	80	85	16	7.5
MSZD-85	ϕ85	85	470	100	105	18	9.0
MSZD-90	ϕ90	90	490	100	105	18	9.5
MSZD-100	ϕ100	100	520	100	105	18	10.0
MSZD-110	ϕ110	110	520	100	105	18	10.0
MSZD-120	ϕ120	120	520	100	105	18	12.0
MSZD-130	ϕ130	130	570	125	130	20	13.5
MSZD-150	ϕ150	150	570	125	130	20	15.5

注：用户所需端子板尺寸与上述不同时，订货时请注明；主体为铝件，其余为热镀锌钢件。
The bodies are aluminium, the others are hot-dip galvanized steel.

MGGD 型管母线伸缩线夹
EXPANSION CLAMP FOR TUBLAR BUS-BAR(TYPE MGGD)

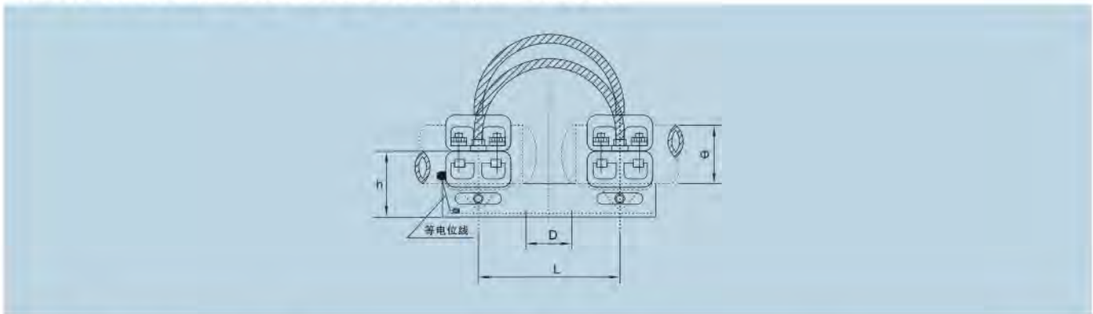

型号 Type	适用母线 Suitable conductor	主要尺寸 Dimensions(mm)			
		ϕ	L	a	h
MGGD-100	ϕ100	100	400	140	135
MGGD-120	ϕ120	120	450	140	145
MGGD-130	ϕ130	130	450	225	155
MGGD-150	ϕ150	150	450	225	160
MGGD-170	ϕ170	170	500	225	180
MGGD-200	ϕ200	200	500	225	210

注：用户所需端子板尺寸与上述不同时，订货时请注明；主体为铝件，其余为热镀锌钢件。
The bodies are aluminium, the others are hot-dip galvanized steel.

变电金具
POWERSTATION FITTING

T型线夹 T-connector

T型线夹主要用于架空电力线路或变电所。在母线在干线以"T"型方式印下电流分支。分螺栓型和压缩型两类，对于小截面导线也可用并沟线夹作为T型连接。

T-T接；M-母线；Y-压缩；G-管；L-螺栓

数字表示适用导线的规格。

T-connectors are used to connect tap conductor with bus line the way of tee joint on overhead transmission lines or substations. The connectors include bolt type and compression type, Actually, parallel groove clamp also can be used as T-connector for conductor of small size.

The meanings of letters & Arabic figures in the catalog are shown as follow.

T: Tee connection; M: Bus-bar; Y: Compression; G: Tube; L: Bolt

Digital presentation suitable wine specification.

T型线夹(TL TY)型
T-CONNECTOR(TL TY)

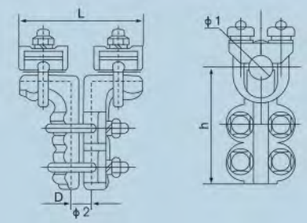

型号 Type	母线宽度 Bus width(mm)	主要尺寸 Dimensions(mm)				重量 Weight(kg)
		Φ1	Φ2	h	L	
TL-11	35-50/35-50	10	10	102	118	0.7
TL-21	70-95/35-50	14	10	103	118	0.8
TL-22	70-95/70-95	14	14	103	120	0.8
TL-31	120-150/35-50	17	10	117	118	1.1
TL-32	120-150/70-95	17	14	117	120	1.1
TL-33	120-150/120-150	17	17	117	120	1.1
TL-41	185-240/35-50	22	10	117	118	1.1
TL-42	185-240/70-95	22	14	117	120	1.1
TL-43	85-240/120-150	22	17	117	120	1.1
TL-44	85-240/185-240	22	22	117	120	1.2

注：线夹本体和盖板为铝合金制件，其余为热镀锌钢制件。

TY2型线夹(液压型)
TY2-CONNECTORS

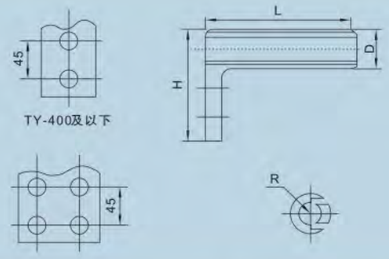

型号 Type	母线宽度 Bus width(mm)	主要尺寸 Dimensions(mm)				重量 Weight(kg)
		L	H	D	R	
TY-240L	LJ-240	170	99	38	23	0.8
TL2-240	LGJ-240	170	128	38	23	1.2
TL2-300	LGJ-300, LGJQ-300	180	132	40	25.6	1.3
TL2-400	LGJ-400, LGJQ-400	190	140	45	29.6	1.4
TL2-500	LGJQ-500	200	139	50	32	1.7
TL2-600	LGJQ-600	220	142	55	55	1.9

注：线夹本体和盖板为铝合金制件，其余为热镀锌钢制件。

TY型线夹
TY CONNECTO

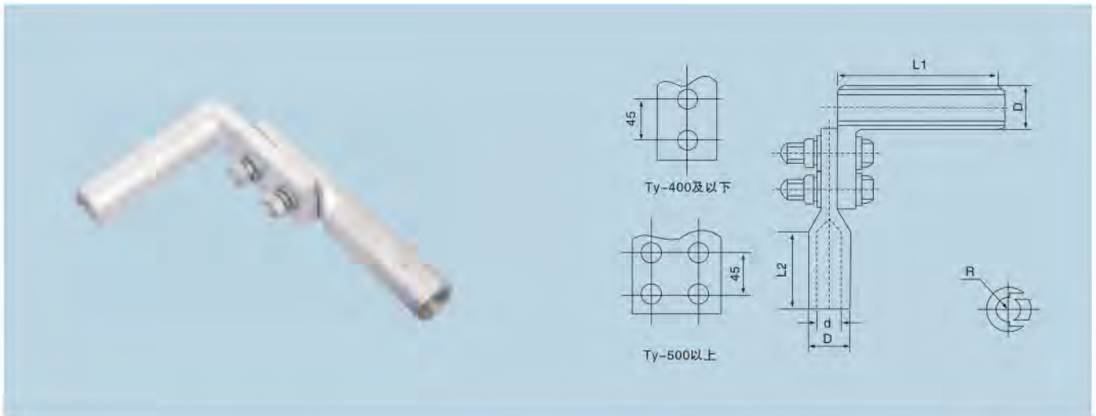

型号 Type	适用导线 Conductor	主要尺寸 Dimensions(mm)					重量 Weight(kg)
		D	d	R	L1	L2	
TY-120/7	LGJ-120/7	26	16.0	8.0	115	80	0.7
TY-150/8	LGJ-150/8	30	17.5	9.0	125	90	0.8
TY-150/20	LGJ-150/20	30	18.0	9.0	125	90	0.8
TY-185/10	LGJ-185/10	32	19.5	10.5	125	90	0.9
TY-185/25	LGJ-185/25	32	20.5	10.5	125	90	0.9
TY-210/10	LGJ-210/10	34	20.5	10.3	135	100	1.0
TY-210/25	LGJ-210/25	34	21.5	10.8	135	100	1.0
TY-240/30	LGJ-240/30	36	23.0	11.5	135	100	1.0
TY-300/15	LGJ-300/15	40	24.5	12.3	145	110	1.7
TY-300/20	LGJ-300/20	40	25.0	12.5	145	110	1.7
TY-300/25	LGJ-300/25	40	25.5	12.8	145	110	1.7
TY-300/40	LGJ-300/40	40	25.5	12.8	145	110	1.7
TY-400/20	LGJ-400/20	45	28.5	14.3	155	120	1.9
TY-400/25	LGJ-400/25	45	28.5	14.3	155	120	1.9
TY-400/35	LGJ-400/35	45	28.5	14.3	155	120	1.9
TY-400/50	LGJ-400/50	45	29.5	14.8	155	120	1.9
TY-500/35	LGJ-500/35	52	31.5	15.8	165	130	2.3
TY-500/45	LGJ-500/45	52	31.5	15.8	165	130	2.3
TY-500/65	LGJ-500/665	52	32.5	16.3	165	130	2.3
TY-630/45	LGJ-630/45	60	35.5	17.8	185	150	4.2
TY-630/55	LGJ-630/55	60	36.0	18.0	185	150	4.2
TY-630/80	LGJ-630/80	60	36.5	18.0	185	150	4.2
TY-800/55	LGJ-800/55	65	40.0	20.0	210	170	5.5
TY-800/70	LGJ-800/70	65	40.5	20.3	210	170	5.5
TY-800/100	LGJ-800/100	65	40.5	20.3	210	170	5.5

注：线夹本体和抽屉为铝制作，其余为热镀锌钢制件。

TYS双导线T型线夹(液压型)
TYS DOUBLE CONDUCTOR CONNECTORS

型号 Type	适用导线 Conductor	主要尺寸 Dimensions(mm)							重量 Weight(kg)
		L	S	H	C	D	f	R	
TYS-300/120-4	LGJ-300, LGJQ-300	400	120	140	100	40	12	13	2.4
TYS-2×300/200	LGJ-300, LGJQ-300	400	200	140	100	40	12	13	2.6
TYS-100/200-2	LGJ-400, LGJQ-400	450	200	160	125	45	12	14.5	3.6
TYS-500/200-1	LGJ-500, LGJQ-500	450	200	168	125	52	16	16	5.5

铝制作

TLY型线夹(螺栓型引流液压)
TLY CONNECTORS

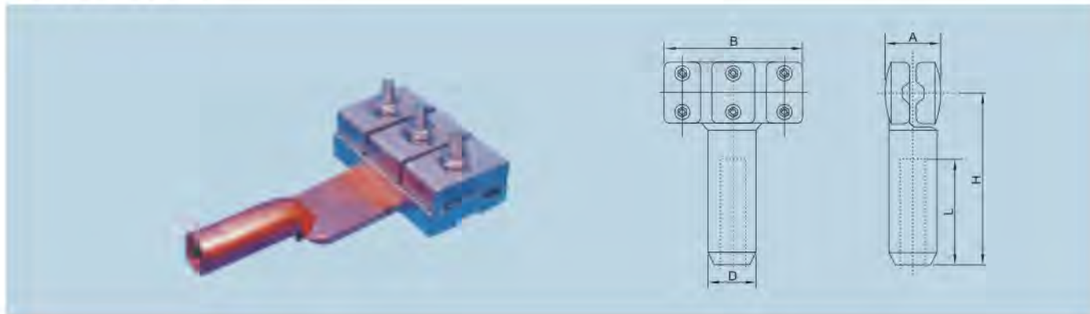

型号 Type	适用导线 Conductor	主要尺寸 Dimensions(mm)					重量 Weight(kg)
		A	B	D	H	L	
TLYS-600K-1	LGKK-600	87	150	46	204	120	2.9
TLYS-600K-2	LGKK-600	101	190	76	270	150	7.2
TLYS-1400K-1	LGJQT-1400	87	150	46	207	120	2.9
TLYS-1400K-2	LGJQT-1400	101	190	76	270	150	7.2
TLYS-900K-2	LGKK-900	89	190	70	260	150	6.7
TLYS-400/50.1	LGJ-400/50	66	150	45	192	120	3.6

注：线夹本体和盖板为铝合金制件，其余为热镀锌钢制件。

TYG型线夹
TYG CONNECTO

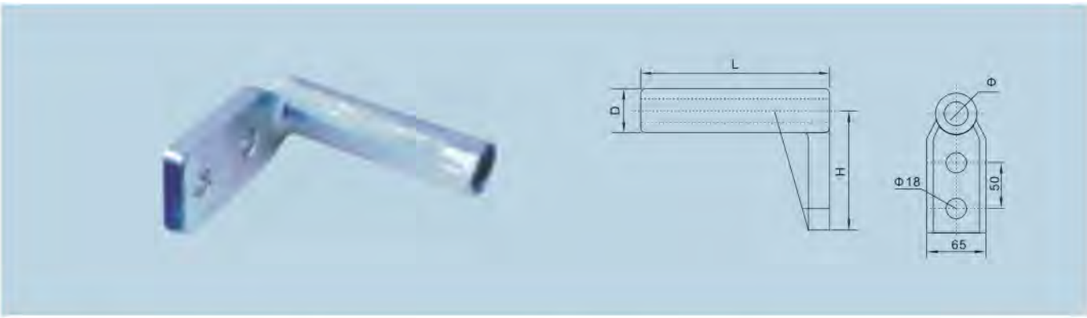

型号 Type	适用导线 Conductor	主要尺寸 Dimensions(mm)				重量 Weight(kg)
		L	H	D	R	
TYG-300Q	LGJQ-300	190	155	40	25.5	0.9
TYG-400Q	LGJQ-400	200	160	45	28.5	1.0

铝制作

T型线夹(螺栓型)
T-CONNECTORS(BOLT TYPE)

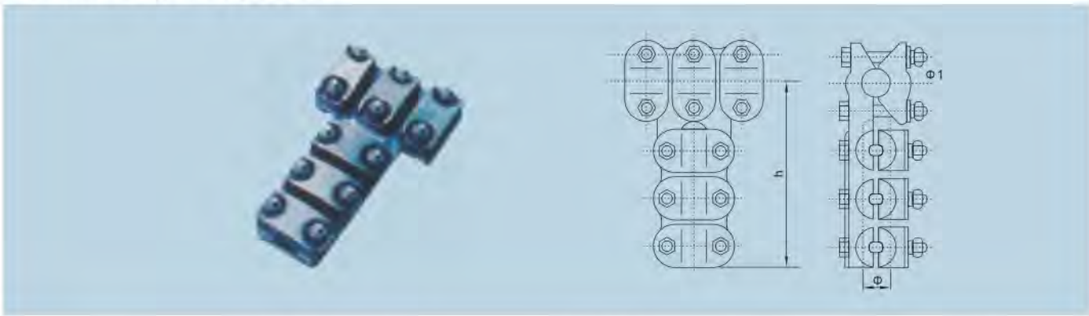

型号 Type	适用导线 Conductor	主要尺寸 Dimensions(mm)		重量 Weight(kg)
	母线/引下线	H	L	
TLL-5/2	25.20/16.00	168	146	2.5
TLL-5/3	29.14/18.00	168	146	4.0
TLL-5/4	29.14/22.40	190	146	4.0
TLL-5/5	29.14/29.14	190	146	4.0

注：线夹本体和盖板为铝合金制作，其余为热镀锌钢制件。

TL双导线T型线夹(螺栓型)
TL DOUBLE CONDUCTOR CONNECTORS(BOLT TYPE)

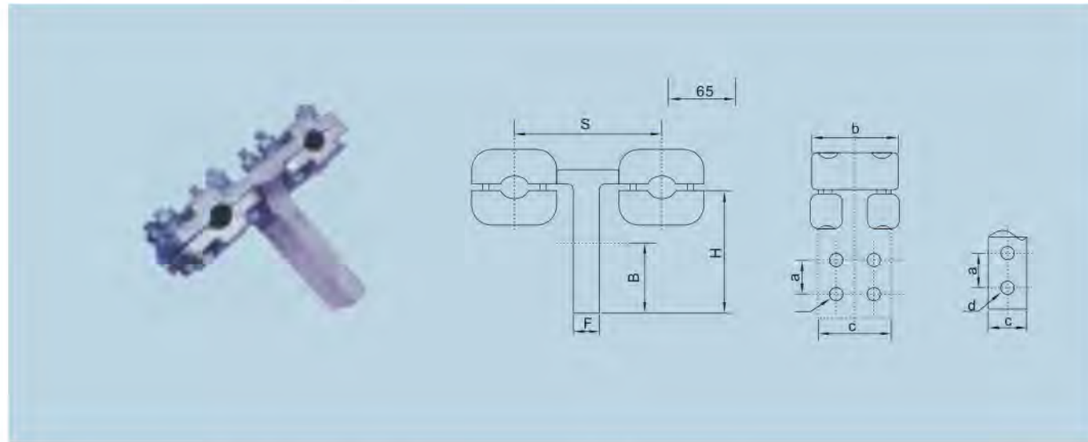

型号 Type	适用导线 Conductor	简图 Diagram	主要尺寸 Dimensions(mm)								重量 Weight(kg)
			a	b	B	C	H	d	f	S	
TL-240/120	LGJQ-240, LGJ-240	2	40	68	80	50	128	14	12	120	1.5
TL-240/200	LGJQ-240, LGJ-240	2	40	68	80	50	113	14	12	200	1.5
TL-300/120	LGJQ-300, LGJ-300	2	50	80	100	63	122	18	16	120	1.5
TL-300/200	LGJQ-300, LGJ-300	2	50	80	100	63	122	14	16	200	1.6
TL-300/200-120	LGJ-300	-	-	80	120	120	142	-	16	200	3.0
TL-300/200-100	LGJ-300	-	-	80	100	100	17	-	16	200	2.8
TL-400/120	LGJQ-400, LGJ-400	2	50	80	100	63	122	18	16	120	1.6
TL-400/200	LGJQ-400, LGJ-400	2	50	80	100	63	122	14	16	200	1.7
TL-500/120	LGJQ-500, LGJ-500	1	40	88	80	80	107	14	16	120	2.1
TL-500/200	LGJQ-500, LGJ-500	1	40	88	80	80	102	14	16	200	2.3
TL-630/120	LGJQ-600, LGJ-630	1	50	100	100	100	122	18	16	120	2.7
TL-630/200	LGJQ-600, LGJ-630	1	50	100	100	100	115	18	20	200	3.9
TL-800/200	LGJ-800/55-100	1	60	125	125	125	142	18	22	200	4.3
TL-400N/200	NAHLGJQ-400	1	50	148	100	100	114	18	20	200	6.2
TL-600K/200	LGKK-600	1	60	120	125	125	180	18	22	200	6.9
TL-900K/120	LGKK-900	1	50	210	100	100	147	18	16	120	7.2
TL-900K/200	LGKK-900	1	50	210	100	100	150	18	16	200	8.2
TL-1400/200	LGJQT-1400	1	60	120	125	125	180	18	22	200	6.9
TL-1440N/200	NAHLGJQ-1400	1	60	140	125	125	183	18	22	200	9.3
TL-1440N/400	NAHLGJQ-1400	1	60	140	125	125	183	18	22	400	10.7

注：线夹本体和盖板为铝合金制作，其余为热镀锌钢制件。

线路金具
CIROUIT FITTING

接续金具 CONNECTION FITTING (HARDWARE)

铝、铜铝母线伸缩节用于变电所电所铝母线间的连接、铜铝母线伸缩节用于变电所铜、铝母线间的连接、铜铝伸缩节产品采用闪光焊接工艺制造。

铜铝过渡板适用于铜母线与铝母线的过渡连接，产品采用闪光焊工艺或摩擦焊工艺制造。

产品型号中字母数字的意义为：M为母线　S伸缩节　SS铜铝过渡伸缩节　ST 全铜伸缩节。

数字表示产品的宽度和厚度。

Aluminium, copper-aluminium bus-bar power shunts is used for the conjunction of leading down wires to each other, copper bus-bars and aluminium bus-bars in substation. Copper-aluminium expansion burls are produced in the technology of flash welding. Copper-aluminium transition plates are suitable for the transitional conjunction of copper bus-bars and aluminium bus-bars, which are made by the technology of flash welding or friction welding.

Additional letters mean: M: bus-bar　S: expansion burl　SS: copper-aluminium transition expansion burl　ST: all-copper expansion burl.

Digital presemtation product and thickmess.

Pengyou
Pengyou power fitting

CCA 型铜接线夹
CCA COPPER CONNECTION CLAMP

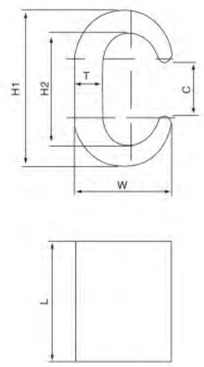

型号 Type	适用导线范围(mm^2) Suitable section of conductors	主要尺寸 Dimensions(mm)					
		H1	H2	W	L	T	C
CCA-1	16~16	22	17	11	12	2.5	5.8
CCA-2	16~25 16~35	20	15	13.5	22	3	8.3
CCA-3	25~25 25~35 35~35	24.7	16.7	14.5	22	4	9.4
CCA-4	16~50 25~50 35~50	27.8	20	17.5	23	6	10.3
CCA-5	16~70 25~70 35~70	26.7	20	17.5	24	4	11.7
CCA-6	25~95 35~95	31	23.5	19.5	25	5	13.2
CCA-7	50~50 50~70	34	21	21.5	24	8	10.8
CCA-8	70~70	34	26	21.5	25	7	11
CCA-9	70~95 95~95	37.4	26.3	21.7	29.5	6	14.5
CCA-10	70~150 95~150 70~185 95~185	46	34.7	30	30.5	7.5	19.6
CCA-11	95~120 120~120	42.6	31.5	25	29	7	16.6
CCA-12	150~150 185~185	54	39	31.7	32.5	9.8	19

CCT 型铜接线夹
CCT COPPER CONNECTION CLAMP

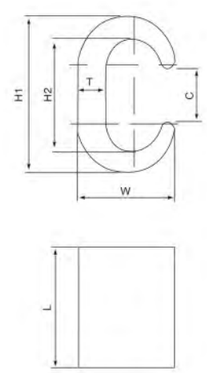

型号 Type	适用导线范围(mm^2) Suitable section of conductors	主要尺寸 Dimensions(mm)					
		H1	H2	W	L	T	C
CCT-10	7.5~11	9.5	6.3	6.2	12	1.6	4
CCT-16	11.5~16	11.8	7.8	7.3	13	2	5
CCT-20	14~20	12.8	8.6	9.7	13	2.9	5.4
CCT-26	21~26	14.7	10.2	10.9	16	3.2	6.5
CCT-44	27~44	19	12.4	14.4	20	4	8.5
CCT-60	45~60	21	15.4	15.1	22	4	9.7
CCT-76	61~76	24.4	17.3	17.6	22	5	10.8
CCT-98	77~98	27.8	20.8	18.1	25	5	12.8
CCT-122	99~122	29.8	22.1	21.2	26	5.5	13.5
CCT-154	123~154	34	25.7	24.2	28	6	17
CCT-190	155~190	37	28.5	25.4	35	6	17.4
CCT-240	191~240	40	30.2	28.5	40	7	19
CCT-288	241~288	44.5	34.7	31.1	45	7	22.3
CCT-365	289~365	47.5	37.7	34	50	7	24.8
CCT-450	366~450	57	42.5	41	60	10	28
CCT-560	451~560	62	46	45	65	11	31
CCT-700	561~700	68	52	49.5	70	12	34

JB型铝并沟线夹
JB SERIES ALUMINUM PARALLEL-GROOVE CLAMP

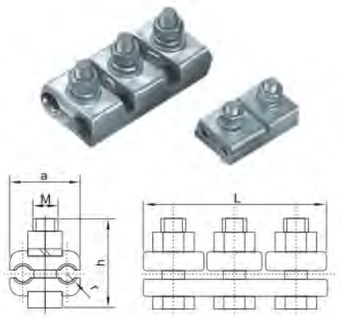

型号 Type	适用导线范围(mm²) Suitable section of conductors	主要尺寸 Dimensions(mm)					重量 Weight(kg)
		a	M	L	r	h	
JB-0	16~25	38	10	72	3.5	40	0.2
JB-1	35~60	45	12	80	5	45	0.4
JB-2	70~95	52	12	112	7	50	0.7
JB-3	120~150	62	16	140	8.9	65	1.1
JB-4	185~240	71	16	142	11	65	1.3

线夹本体和盖板为铝合金件，其余全部热镀锌钢制件。
Clamp body and cover plate are aluminum alloy, others are hot-dip galvanized steel.

JBT 型铜并沟线夹
JBT SERIES COPPER PARALLEL-GROOVE CLAMP

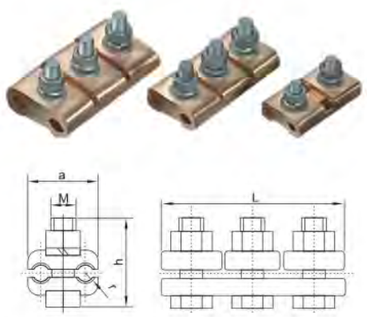

型号 Type	适用导线范围(mm²) Suitable section of conductors	主要尺寸 Dimensions(mm)				
		a	M	L	r	h
JBT-0	16~25	35	10	55	3.5	35
JBT-1	35~60	40	10	70	5	35
JBT-2	70~95	50	12	100	6.5	45
JBT-3	120~150	63	12	110	8.5	50
JBT-4	185~240	65	12	110	10.5	50

线夹本体和盖板为铜，其余全部热镀锌钢制件。
Clamp body and cover plate are copper, others are hot-dip galvanized steel.

JB-TL 型铜并沟线夹
JB-TL SERIES COPPER PARALLEL-GROOVE CLAMP

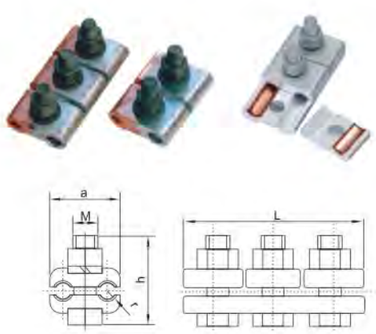

备注：规格后加W表示采用无钎料焊接工艺。

型号 Type	适用铝线 For aluminum wire(mm²)	适用铜线 For copper wire(mm²)	主要尺寸 Dimensions(mm)					
			a	M	L	r1	r2	h
JB-TL-0	16~25	16~25	35	10	60	3.5	3.5	35
JB-TL-10	35~50	16~25	40	10	70	5	3.5	35
JB-TL-11	35~50	35~50	40	10	70	5	5	35
JB-TL-21	70~95	35~50	50	12	100	6.5	5	45
JB-TL-22	70~95	70~95	50	12	100	6.5	6.5	45
JB-TL-31	120~150	35~50	62	12	110	8	5	50
JB-TL-32	120~150	70~95	62	12	110	8	6.5	50
JB-TL-33	120~150	120~150	62	12	110	8	8	50
JB-TL-41	185~240	35~50	65	12	110	10.5	5	50
JB-TL-42	185~240	70~95	65	12	110	10.5	6.5	50
JB-TL-43	185~240	120~150	65	12	110	10.5	8.5	50
JB-TL-44	185~240	185~240	65	12	110	10.5	10.5	50

线夹本体和盖板为铜，其余全部热镀锌钢制件。
Clamp body and cover plate are copper, others are hot-dip galvanized steel.

CAPG型铜铝并沟线夹
CAPG COPPER-ALUMINIUM PG CLAMP

CAPG-A

型号 Type	适用导线范围(mm²) Suitable section of conductors	备注 Remark
CAPG-A1	CU6-50²AL 16-70/12²	单螺栓 Single bolt
CAPG-A2	CU10-95²AL 25-150²	单螺栓 Single bolt
CAPG-B1	CU6-50²AL 16-70/12²	双螺栓 Double bolt
CAPG-B2	CU10-95²AL 25-150²	双螺栓 Double bolt
CAPG-C1	CU6-50²AL 16-120²	双螺栓 Double bolt
CAPG-C2	CU50-240²AL 50-240²	双螺栓 Double bolt
CAPG-D	CU35-240²AL 35-300²	三螺栓 Tri bolt

CAPG-B

CAPG-C

APG型铜铝并沟线夹
APG COPPER-ALUMINIUM PG CLAMP

APG

型号 Type	适用导线范围(mm²) Suitable section of conductors	备注 Remark
APG-A	AL 16-70²	单螺栓 Single bolt
APG-B1	AL 16-35²	双螺栓 Double bolt
APG-B2	AL 16-70²	双螺栓 Double bolt
APG-B3	AL 16-150²	双螺栓 Double bolt
APG-B4	AL 30-300²	双螺栓 Double bolt

JAPG型铝并沟线夹
JAPG ALUMINIUM PG CLAMP

型号 Type	适用导线范围(mm²) Suitable section of conductors
JAPG-1	AL 25-35²
JAPG-2	AL 50-70²
JAPG-3	AL 95-120²

JLL 铝双线夹引进铜、引进T/J铜螺栓线夹
JLL SERIES ALUMINUM PARALLEL-GROOVE CLAMP

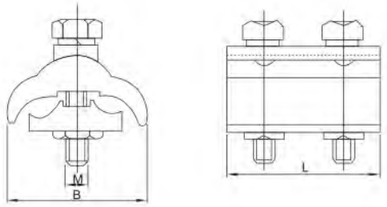

型号 Type	B	L	M
AL-16-120	45	50	M8
AL-10-150	50	50	M8
AL-35-185	62	64	M10

JLL-1 JLL-2

JLT

引进铜接线夹，采用H62黄铜压铸制造。
Imported copper wire clamp,made of BrassH62 by diecast.

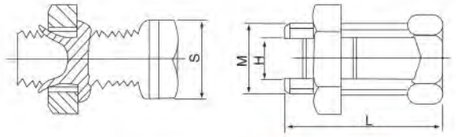

T/J

型号 Type	L	M	H	S
T/J-16	20	M17×2.5	6	18
T/J-25	27	M19×2.5	7	20
T/J-35	35	M21×2.5	7	22
T/J-50-70	42	M23×2.5	11	24
T/J-90-120	45	M25×2.5	14	26
T/J-150-185	60	M29×2.5	17	30
T/J-200-240	62-72	M31×2.5	20	32

JY型接续管(钢绞线用、液压对接)
SPLICING SLEEVES (FOR STEEL STRAND AND HYDRAULIC COMPRESSION OVERLAP JOINT)

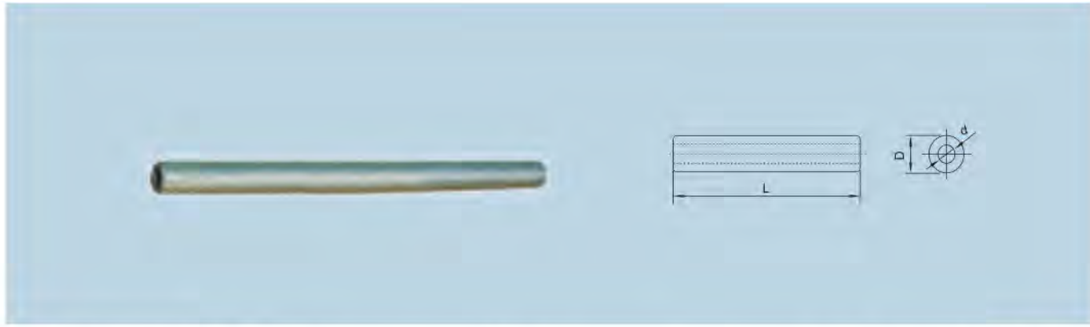

型号 Type	适用导线范围(mm^2) Suitable section of conductors	主要尺寸 Dimensions(mm)			握力 Grip strength(kN)	重量 Weight(kg)
		D	d	L		
JY-35G	GJ-35	16	8.4	220	45	0.6
JY-50G	GJ-50	18	9.6	240	60	0.4
JY-70G	GJ-70	22	11.7	290	88	0.7
JY-100G	GJ-100	26	13.7	320	123	1.0
JY-150G	GJ-150	32	16.5	430	162	2.0

热镀锌刚制件。Hot-dip galvanized steel.

JBD型接续管(钢绞线用、爆压塔接)
SPLICING SLEEVES (FOR STEEL STRAND AND EXPLOSIVE OVERLAP JION)

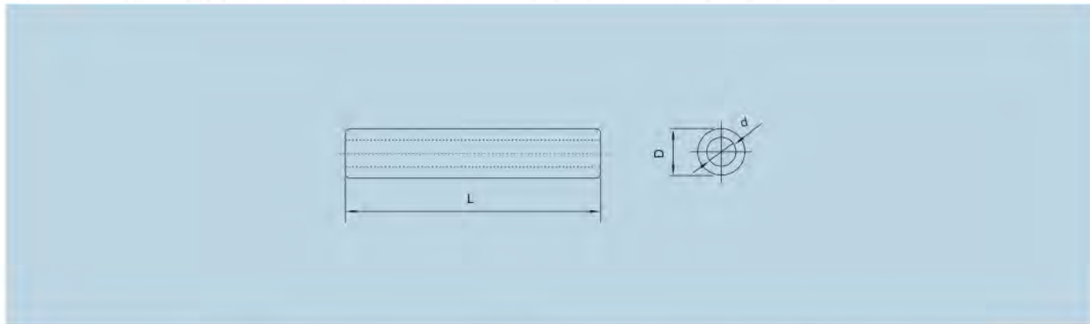

型号 Type	适用导线范围(mm^2) Suitable section of conductors	主要尺寸 Dimensions(mm)			握力 Grip strength(kN)	重量 Weight(kg)
		D	d	L		
JBD-35G	GJ-35	22	16	110	45	0.2
JBD-50G	GJ-50	25	17	130	60	0.3
JBD-70G	GJ-70	28	20	150	88	0.4
JBD-100G	GJ-100	32	23	170	123	0.6

热镀锌刚制件。Hot-dip galvanized steel.

JY型接续管(铝绞线用、液压)

SPLICING SLEEVES (FOR STEEL STRAND HYDRAULIC COMPRESSION)NDING CONNECTOR(1kV)

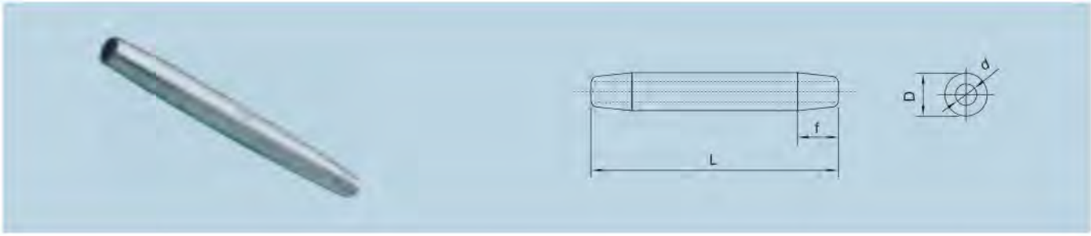

型号 Type	适用导线范围(mm²) Suitable section of conductors	主要尺寸 Dimensions(mm)				握力 Grip strength(kN)	重量 Weight(kg)
		D	f	d	L		
JY-150L	LJ-150	30	20	17.0	280	22	0.4
JY-185L	LJ-185	32	20	19.0	310	27	0.5
JY-210L	LJ-210	34	20	20.0	330	31	0.6
JY-240L	LJ-240	36	20	21.0	350	34	0.7
JY-300L	LJ-300	40	25	24.0	390	45	1.0
JY-400L	LJ-400	45	25	27.5	450	56	1.2
JY-500L	LJ-500	52	30	30.5	510	73	2.0
JY-630L	LJ-630	60	35	34.5	570	87	3.0
JY-800L	LJ-800	65	40	38.5	650	110	3.8

铝制件。 Aluminum material.

JY型架空绝缘线用接线管

SPLICING SLEEVES FOR OVERHEAD INSULATION LINE

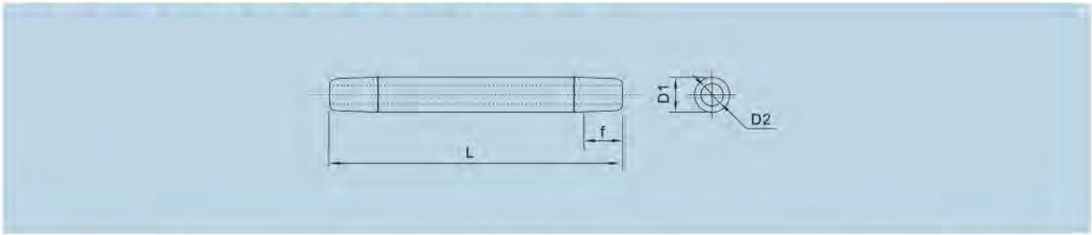

型号 Type	适用导线范围(mm²) Suitable section of conductors	主要尺寸 Dimensions(mm)				握力 Grip strength(kN)	重量 Weight(kg)
		D	D2	f	L		
JY-35LY	JKLYJ-35	20	7.6	15	130	4.9	0.10
JY-50LY	JKLYJ-50	20	9.0	15	140	6.7	0.10
JY-70LY	JKLYJ-70	22	11.0	15	170	9.8	0.13
JY-95LY	JKLYJ-95	24	12.5	15	190	13.0	0.17
JY-120LY	JKLYJ-120	26	14.0	15	210	16.5	0.22
JY-150LY	JKLYJ-150	28	15.5	20	240	20.0	0.28
JY-185LY	JKLYJ-185	32	17.0	20	260	25.4	0.40
JY-240LY	JKLYJ-240	34	19.5	20	290	33.0	0.50

铝制件。注：外绝缘用的胶片可以配套供应。 Aluminum material. Note: rubber sheet for outer insulation may supply in package.

JY型铝包钢绞线用接续管(液压型)

SPLICING SLEEVES FOR ACSR (HYDRAULIC COMPRESSION)

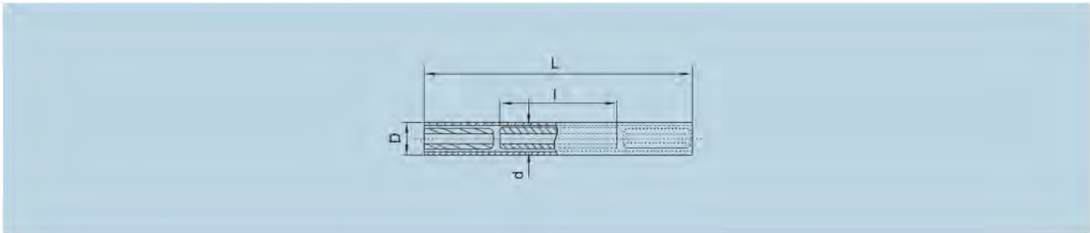

型号 Type	适用导线范围(mm²) Suitable section of conductors	主要尺寸 Dimensions(mm)				握力 Grip strength(kN)	重量 Weight(kg)
		D	d	L	l		
JY-50BG	LB20J-50	32	18	440	240	55.8	1.00
JY-70BG	LB27J-70	32	20	550	320	65.8	1.63
JY-80BG	LB20J-80	34	24	5550	320	85	2.12
JY-95BG	LB27J-120	34	24	550	330	56	1.66
JY-120BG	LB40J-95	36	26	640	400	112	2.00

内接续管为热镀锌钢制件，外接续管及两端衬管为铝制件。
Inner connection pipe is hot-dip galvanized steel, outer connection pipe and two terminals liner pipe are aluminum.

JY JYD型铝包钢芯绞线用接续管(液压型)

SPLICING SLEEVES FOR ACSR (HYDRAULIC COMPRESSION TYPE)

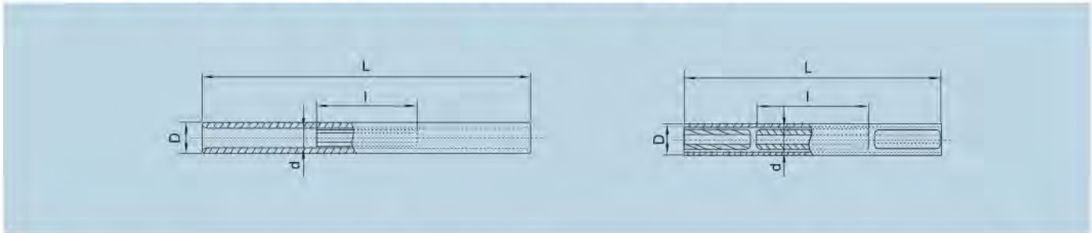

型号 Type	适用导线范围(mm²) Suitable section of conductors	简图 Diagram	主要尺寸 Dimensions(mm)				握力 Grip strength(kN)	重量 Weight(kg)
			D	d	L	l		
JY-80/47BG	ACSR/AS-80/47	2	36	18	480	250	64.6	1.30
JY-95/55BG	ACSR/AS-95/55	2	36	20	500	260	70	1.32
JYD-240/40BG	ACSR/AS-240/40	1	38	22	500	110	81.6	1.18
JYD-300/25BG	ACSR/AS-300/25	1	42	20	500	90	74.4	1.35
JYD-300/40BG	ACSR/AS-300/40	1	42	22	530	110	90.0	1.42
JYD-300/50BG	ACSR/AS-300/50	1	42	24	550	130	101	1.50
JYD-400/35BG	ACSR/AS-400/35	1	48	22	560	100	99.0	2.03
JYD-400/50BG	ACSR/AS-400/50	1	48	24	590	130	117	2.07

内接续管为热镀锌钢制件，外接续管及两端衬管为铝制件。
Inner connection pipe is hot-dip galvanized steel, outer connection pipe and two terminals liner pipe are aluminum.

JYB型接续管(钢芯铝绞线用、爆压搭接)
SPLICING SLEEVES (FOR ACSR AND EXPLOSIVE OVERLAP JOINT)

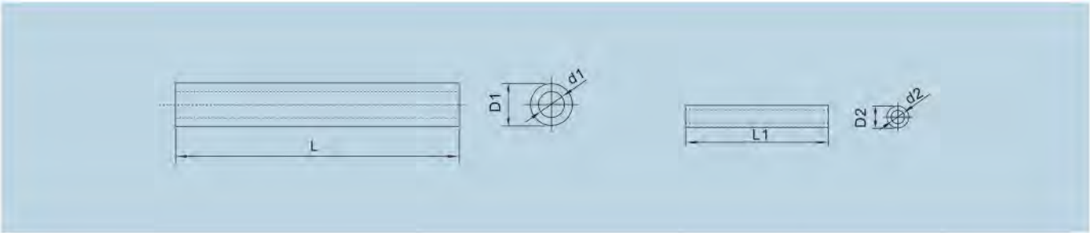

型号 Type	适用导线范围(mm²) Suitable section of conductors	主要尺寸 Dimensions(mm)						握力 Grip strength(kN)	重量 Weight(kg)
		D_1	D_2	d_1	d_2	L	L_1		
JYB-300/40	LGJ-300/40	40	22	25.5	17	430	120	87	1.1
JYB-300/50	LGJ-300/50	40	22	26.0	17	450	140	98	1.1
JYB-300/70	LGJ-300/70	42	24	27.0	19	510	160	122	1.4
JYB-400/35	LGJ-400/35	45	24	29.0	19	510	120	99	1.4
JYB-400/50	LGJ-400/50	48	24	29.5	19	510	140	117	1.5
JYB-400/65	LGJ-400/65	48	26	29.5	21	520	160	128	1.8
JYB-400/95	LGJ-400/95	48	28	31.0	22	550	170	163	1.9
JYB-500/65	LGJ-500/65	52	24	32.5	19	560	160	146	2.2

外接续管为铝制件，内接续管为热镀锌钢制件。
Outer connection pipe is aluminum, inner connection pipe is hot-dip galvanized steel.

接线管(良导体地线用、液压)
SPLICING SLEEVES (FOR GOOD CONDUCTOR GROUND WIRE AND HYDRAULIC COMPRESSION)

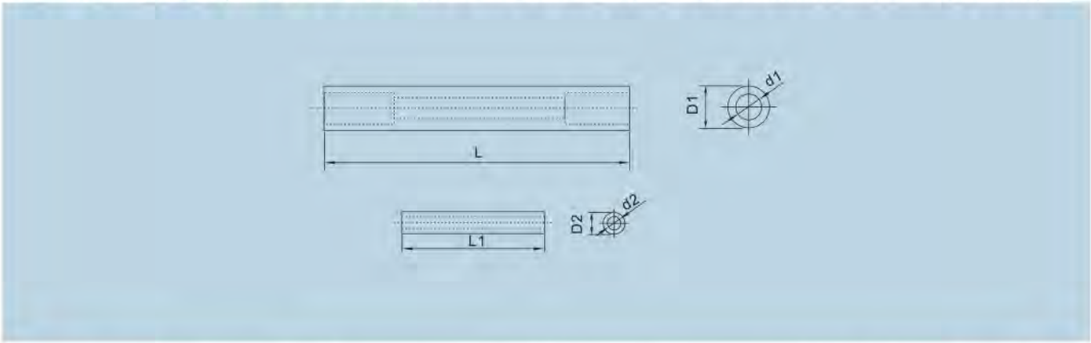

型号 Type	适用导线范围(mm²) Suitable section of conductors	主要尺寸 Dimensions(mm)						握力 Grip strength(kN)	重量 Weight(kg)
		D_1	D_2	d_1	d_2	L	L_1		
JY-70/40	LGJ-70/40	32	16	21.0	8.8	450	215	55	1.03
JY-95/55	LGJ-95/55	34	22	23.0	10.2	480	280	74	1.13
JYD-95/55	LGJ-95/55	34	17.5	24	16.0	370	110	74	0.82
JY-95/140	LGJ-95/140	45	30	32.0	16.0	685	415	163	3.20

外管为铝制件，内管为热镀锌钢制件。
Outer connection pipe is aluminum, inner connection pipe is hot-dip galvanized steel.

JT型接续管(铝绞线用、钳压)
SPLICING SLEEVES (FOR ALUMINUM STRAND AND CLAMP COMPRESSION)

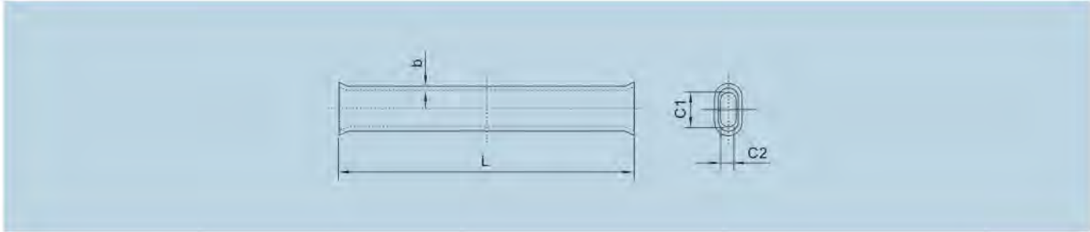

型号 Type	适用导线范围(mm²) Suitable section of conductors	主要尺寸 Dimensions(mm)				握力 Grip strength(kN)	重量 Weight(kg)
		b	C_1	C_2	L		
JT-16L	LJ-16	1.7	12.0	6.0	110	2.7	0.02
JT-25L	LJ-25	1.7	14.4	7.2	120	4.1	0.03
JT-35L	LJ-35	1.7	17.0	8.5	140	5.5	0.04
JT-50L	LJ-50	1.7	20.0	10.0	190	7.5	0.05
JT-70L	LJ-70	1.7	23.7	11.7	210	10.0	0.07
JT-95L	LJ-95	1.7	26.8	13.4	280	14.0	0.10
JT-120L	LJ-120	2.0	30.0	15.0	300	18.0	0.15
JT-150L	LJ-150	2.0	34.0	17.0	320	22.0	0.16
JT-185L	LJ-800	2.0	38.0	19.0	340	27.0	0.20

铝制件。 Aluminum material.

JX型补修管(钢绞线用)
REPAIR SLEEVES (FOR STEEL STRAND)

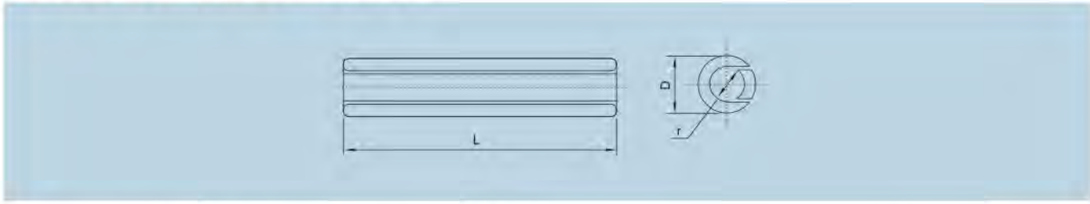

型号 Type	适用导线范围(mm²) Suitable section of conductors	主要尺寸 Dimensions(mm)			重量 Weight(kg)
		D	L	r	
JX-35G	GJ-35	16	120	4.2	0.11
JX-50G	GJ-50	18	120	4.8	0.14
JX-70G	GJ-70	22	140	5.8	0.25
JX-80G	GJ-80	24	140	6.2	0.40
JX-100G	GJ-100	26	140	7.0	0.41
JX-150G	GJ-150	32	200	8.4	0.90

热镀锌钢制件。 Hot-dip galvanized steel.

JT型接续管(钢芯铝绞线用、钳压)
SPLICINS SLEEVES (FOR ACSR,CLAMP TYPE)

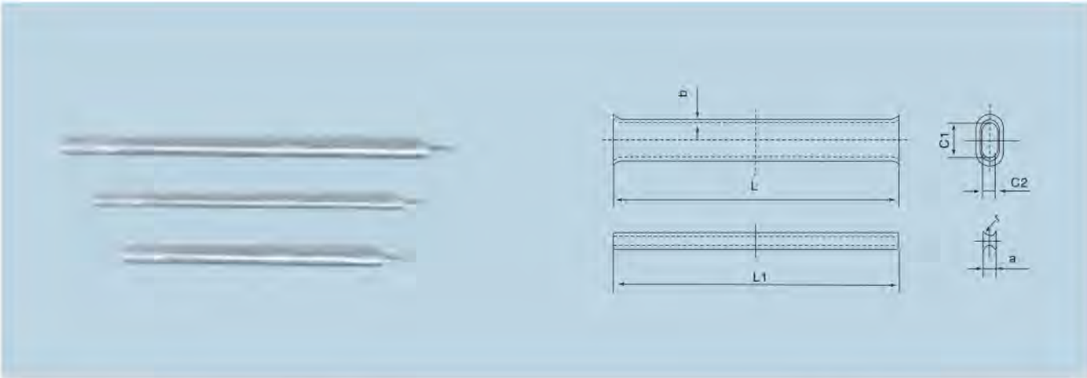

型号 Type	适用导线范围(mm²) Suitable section of conductor	主要尺寸 Dimensions(mm)							握力 Grip strength (kN)	重量 Weight(kg)
		a	b	C1	C2	r	L	L1		
JT-10/2	LGJ-10/2	4.0	1.7	11.0	5.0	–	170	180	3.9	0.05
JT-16/3	LGJ-16/3	5.0	1.7	14.0	6.0	–	210	220	5.8	0.07
JT-25/4	LGJ-25/4	6.5	1.7	16.6	7.8	–	270	280	8.8	0.08
JT-35/6	LGJ-35/6	8.0	2.1	18.6	8.8	12.0	340	350	12.0	0.17
JT-50/8	LGJ-50/8	9.5	2.3	22.0	10.5	13.0	420	430	16.0	0.23
JT-70/10	LGJ-70/10	11.5	2.6	26.0	12.5	14.0	500	510	22.0	0.34
JT-95/15	LGJ-95/15	14.0	2.6	31.0	15.0	15.0	690	700	33.0	0.52
JT-95/20	LGJ-95/20	14.0	2.6	31.5	15.2	15.0	690	700	35.0	0.55
JT-120/7	LGJ-120/7	15.0	3.1	33.0	16.0	15.0	910	920	26.0	0.60
JT-120/20	LGJ-120/20	15.5	3.1	35.0	17.0	15.0	910	920	39.0	0.91
JT-150/8	LGJ-150/8	16.0	3.1	36.0	17.5	17.5	940	.950	31.0	1.05
JT-150/20	LGJ-150/20	17.0	3.1	37.0	18.0	17.5	940	950	44.0	1.10
JT-150/25	LGJ-150/25	17.5	3.1	39.0	19.0	17.5	940	950	51.0	1.15
JT-185/10	LGJ-185/10	18.0	3.4	40.0	19.5	18.5	1040	1060	39.0	1.40
JT-185/25	LGJ-185/25	19.5	3.4	43.0	21.0	18.0	1040	1060	56.0	1.42
JT-185/30	LGJ-185/30	19.5	3.4	43.0	21.0	18.0	1040	1060	61.0	1.50
JT-210/10	LGJ-210/10	20.0	3.6	43.0	21.0	19.5	1070	1090	43.0	1.52
JT-210/25	LGJ-210/25	20.0	3.6	44.0	21.5	19.5	1070	1090	63.0	1.58
JT-210/35	LGJ-210/35	20.5	3.6	45.0	22.0	19.5	1070	1090	71.0	1.62
JT-240/30	LGJ-240/30	22.0	3.9	48.0	23.5	20.0	540	550	72.0	1.00
JT-240/40	LGJ-240/40	22.0	3.9	48.0	23.5	20.0	540	550	79.0	1.00

铝制件。Aluminum material.

JTB型接续管(钢芯铝绞线用、爆压)
SPLICINS SLEEVES (FOR ACSR AND EXPLOSIVE COMPRESSIM)

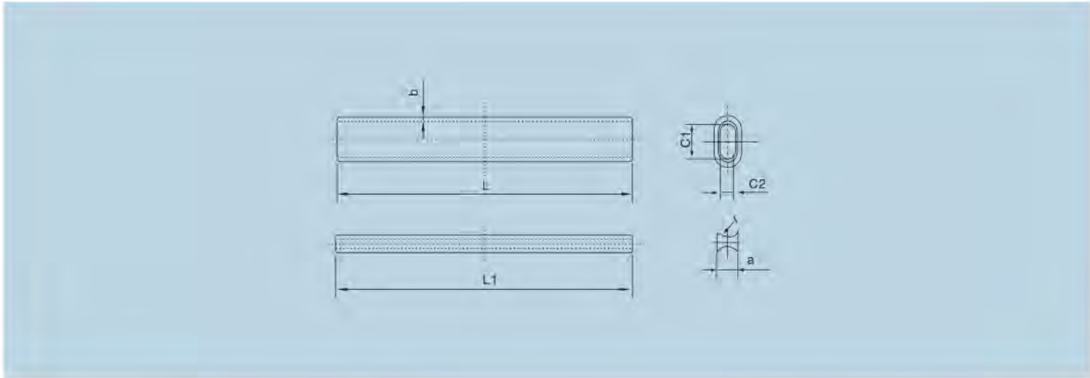

型号 Type	适用导线范围(mm²) Suitable section of conductor	主要尺寸 Dimensions(mm)							握力 Grip strength (kN)	重量 Weight(kg)
		a	b	C1	C2	r	L	L1		
JTB-35/6	LGJ-35/6	8.0	2.1	18.6	8.8	12.0	180	180	12	0.08
JTB-50/8	LGJ-50/8	9.5	2.3	22.0	10.5	13.0	220	220	16	0.13
JTB-70/10	LGJ-70/10	11.5	2.6	26.0	12.5	14.0	260	260	22	0.19
JTB-95/15	LGJ-95/15	14.0	2.6	31.0	15.0	15.0	270	270	33	0.25
JTB-95/20	LGJ-95/20	14.0	2.6	31.5	15.2	15.0	270	270	35	0.25
JTB-120/7	LGJ-120/7	15.0	3.1	33.0	16.0	15.0	270	310	26	0.34
JTB-120/20	LGJ-120/20	15.5	3.1	35.0	17.0	15.0	310	310	39	0.34
JTB-150/8	LGJ-150/8	16.0	3.1	36.0	17.5	17.5	310	320	31	0.40
JTB-150/20	LGJ-150/20	17.0	3.1	37.0	18.0	17.5	320	320	44	0.40
JTB-150/25	LGJ-150/25	17.5	3.1	39.0	19.0	17.5	320	320	51	0.40
JTB-185/10	LGJ-185/10	18.0	3.4	40.0	19.5	18.0	360	360	39	0.50
JTB-185/25	LGJ-185/25	19.5	3.4	43.0	21.0	18.0	360	360	56	0.50
JTB-185/30	LGJ-185/30	19.5	3.4	43.0	21.0	18.0	360	360	61	0.50
JTB-210/10	LGJ-210/10	20.0	3.6	43.0	21.0	19.5	370	370	43	0.57
JTB-210/25	LGJ-210/25	20.0	3.6	44.0	21.5	19.5	370	370	63	0.63
JTB-210/35	LGJ-210/35	20.5	3.6	45.0	22.0	19.5	370	410	71	0.67
JTB-240/30	LGJ-240/30	20.0	3.9	48.0	23.5	20.0	410	410	72	0.80
JTB-240/40	LGJ-240/40	20.0	3.9	48.0	23.5	20.0	470	470	79	0.84

铝制件。Aluminum material.

JYD型接续管(钢芯铝绞线用、钳压)
SPLICINS SLEEVES (FOR ACSR HYDRAULIC OVERLAP JOINT)

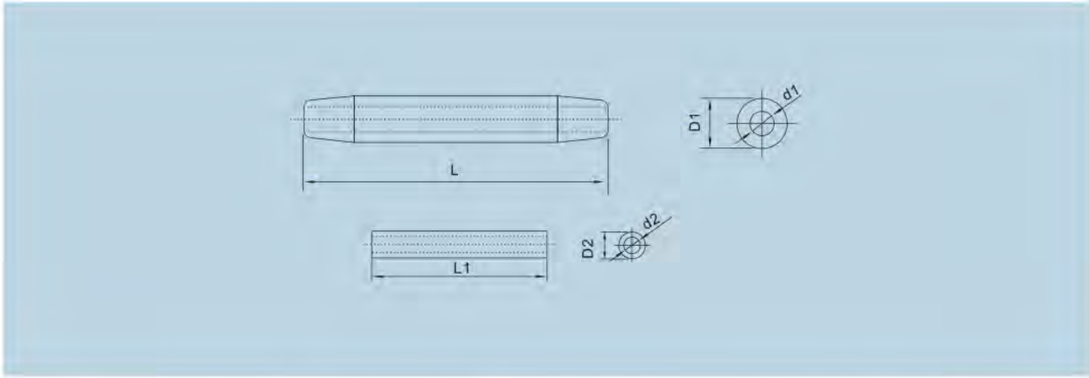

型号 Type	适用导线范围(mm²) Suitable section of conductors	主要尺寸 Dimensions(mm)						握力 Grip strength(kN)	重量 Weight(kg)
		D_1	D_2	L	L_1	d_1	d_2		
JYD-240/30	LGJ-240/30	36	20	440	80	23.0	12.0	72	0.86
JYD-240/40	LGJ-240/40	36	20	440	80	23.0	13.0	79	0.86
JYD-240/55	LGJ-240/55	36	22	460	100	24.0	16.0	97	0.88
JYD-300/15	LGJ-300/15	40	18	470	50	24.5	8.4	65	1.10
JYD-300/20	LGJ-300/20	40	18	480	60	25.0	9.8	72	1.15
JYD-300/25	LGJ-300/25	40	20	480	70	25.5	11.2	79	1.15
JYD-300/40	LGJ-300/40	40	20	480	80	25.5	13.3	88	1.20
JYD-300/50	LGJ-300/50	40	22	490	100	26.0	15.0	98	1.20
JYD-300/70	LGJ-300/70	42	24	510	110	27.0	18.0	122	1.37
JYD-400/20	LGJ-400/20	45	18	550	60	28.5	9.8	874	1.52
JYD-400/25	LGJ-400/25	45	20	550	70	28.5	11.2	91	1.55
JYD-400/35	LGJ-400/35	45	22	540	80	28.5	13.0	99	1.56
JYD-400/50	LGJ-400/50	45	24	550	100	29.5	15.4	117	1.61
JYD-400/65	LGJ-400/65	48	26	560	110	29.5	17.2	129	1.96
JYD-500/35	LGJ-500/35	52	22	610	80	31.5	13.0	114	2.36
JYD-500/45	LGJ-500/45	52	24	610	90	31.5	14.0	122	2.41
JYD-500/65	LGJ-500/65	52	26	610	110	32.5	17.2	146	2.50
JYD-630/45	LGJ-630/45	60	24	680	90	35.5	14.0	141	3.71
JYD-630/55	LGJ-630/55	60	26	680	100	36.0	16.0	156	3.80
JYD-800/55	LGJ-800/55	65	26	760	100	40.0	16.0	182	4.50
JYD-800/70	LGJ-800/70	65	26	760	100	40.8	18.0	197	4.45

铝制件。Aluminum material.

JX型补修管(钢芯铝绞线用)
REPAIR SLEEVES (FOR ACSR)

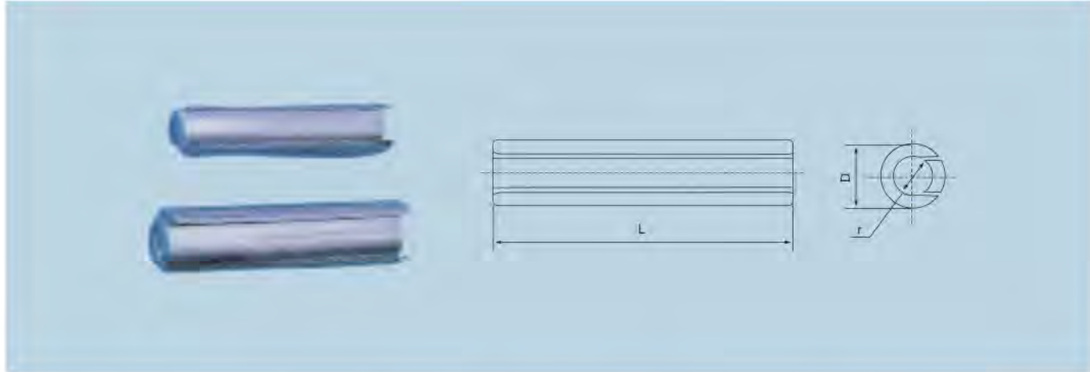

型号 Type	适用导线范围(mm²) Suitable section of conductors	主要尺寸 Dimensions(mm)			重量 Weight(kg)
		D	L	r	
JX-95/55	LGJ-95/55	32	150	9.0	0.25
JX-185/10	LGJ-185/10	32	150	10.0	0.20
JX-185	LGJ-185/25 185/30 185/40 210/10	32	150	10.5	0.20
JX-210	LGJ-210/25 210/35	34	200	11.0	0.29
JX-240	LGJ-240/30 240/40 240/50	36	200	12.0	0.33
JX-240/55	LGJ-240/55	40	250	12.5	0.31
JX-300/15	LGJ-300/15	40	250	13.0	0.52
JX-300	LGJ-300/20 300/25 300/40 300/50	42	250	13.5	0.51
JX-300/70	LGJ-300/70	45	300	14.5	0.55
JX-400	LGJ-400/20 400/25 400/35	45	320	14.5	0.75
JX-400/50	LGJ-400/50	48	300	15.0	0.90
JX-400/65	LGJ-400/65	48	320	15.5	0.90
JX-400/95	LGJ-400/95	52	320	16.0	0.85
JX-500	LGJ-500/35 500/45 500/65	60	370	18.0	1.07
JX-630	LGJ-630/45 630/55 630/80	60	370	18.0	0.70
JX-800/55	LGJ-800/55	65	370	20.0	1.90
JX-800	LGJ-800/700 800/100	65	350	20.5	1.90

铝制件。Aluminum material.

JBG型并沟线夹
JBG PARALLEL-GROOVE CLAMP

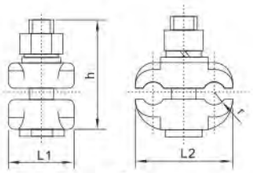

图1

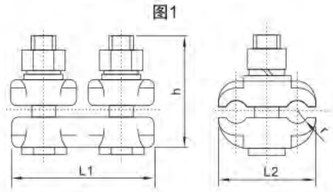

图2

型号 Type	适用导线外径(mm) Suitable section of conductor	简图 Diagram	主要尺寸 Dimensions(mm)				重量 Weight(kg)
			H	r	L_1	L_2	
JBG-1	4.5-11.5	1	60	6.0	36	43	0.10
JBG-2	11.5-14.0	2	58	7.0	68	48	0.40
JBG-3	14.0-17.0	2	75	8.5	72	58	0.55
JBG-4	17.0-22.0	2	75	11.0	80	72	0.75

线夹本体和盖板为铝合金件，其余全部热镀锌钢制件。
Clamp body and cover plate are aluminum alloy, others are hot-dip galvanized steel.

JBG型并沟线夹
JBG PARALLEL-GROOVE CLAMP

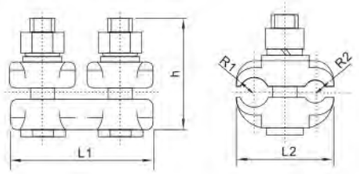

型号 Type	适用导线外径(mm) Suitable section of conductor	主要尺寸 Dimensions(mm)						重量 Weight(kg)
		H	R_1	R_2	R_3	L_1	L_2	
JBG-1-2	4.5-11.5 11.5-14.0	45	6.0	7.0	7.0	68	45	0.40
JBG-2-3	11.5-14.0 14.0-17.0	65	7.0	8.5	8.5	72	60	0.55
JBG-2-4	11.5-14.0 17.0-22.0	65	7.0	11.0	11.0	80	64	0.75
JBG-3-4	14.0-17.0 17.0-22.0	65	8.5	11.0	11.0	80	68	0.80

线夹本体和盖板为铝合金件，其余全部热镀锌钢制件。
Clamp body and cover plate are aluminum alloy, others are hot-dip galvanized steel.

JBB型并沟线夹(钢绞线用)
JBB SERIES PARALLEL GROOVE CLAMP (FOR STEEL STRAND)

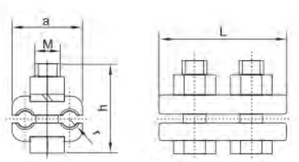

图1

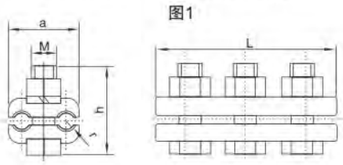

图2

型号 Type	适用导线外径(mm) Suitable section of conductor	简图 Diagram	主要尺寸 Dimensions(mm)					重量 Weight(kg)
			a	M	L	r	h	
JBB-1	25-35	1	44	12	90	4.5	48	0.7
JBB-2	50-70	2	50	16	90	6.0	60	1.0
JBB-3	100-120	2	56	16	124	7.0	65	1.9

线夹本体和盖板为可锻铸铁件，全部热镀锌。
Clamp body and cover plate are cast iron, all are hot galvanizing.

JB型铝并沟线夹(耐热铝合金导线用)
RARELLEL-GROORE CLAMP (FOR HEAT-PROOF ALUMINIUM ALLOY CONDUCTOR)

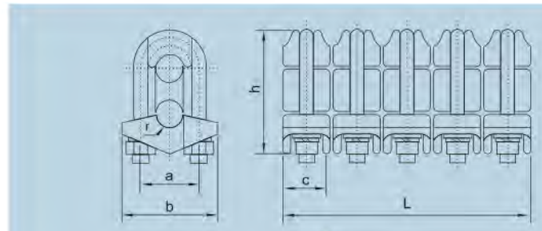

图1

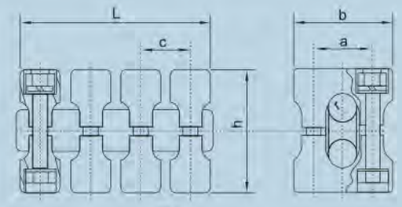

图2

型号 Type	适用导线型号 Suitable section of conductor	简图 Diagram	主要尺寸 Dimensions(mm)					重量 Weight(kg)
			a	b	c	r	L	
JB-400N	NAHLGJQ-400	1	58	96	46	14.0	250	3.8
JB-1440N	NAHLGJQ-1440	2	92	144	76	26.0	280	4.3

线夹本体和盖板为铝合金件，其余全部热镀锌钢制件。
Clamp body and cover plate are aluminum alloy, others are hot-dip galvanized steel.

JYT型跳线线夹
JUNPER CONDUCTOR CLAMP

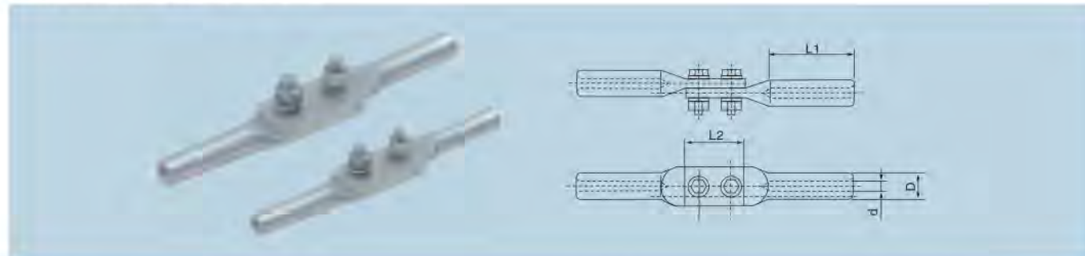

型号 Type	适用导线型号 Suitable section of conductor	主要尺寸 Dimensions(mm)				重量 Weight(kg)
		D	L_1	L_2	d	
JYT-35/6	LGJ-35/6	16	60	65	9.5	0.2
JYT-70/10	LGJ-70/10	22	70	65	13.0	0.4
JYT-95/15	LGJ-95/15	26	80	65	15.0	0.4
JYT-120/7	LGJ-120/7	26	80	85	16.0	0.5
JYT-120/20	LGJ-120/20	26	80	85	16.5	0.5
JYT-150/8	LGJ-150/8	30	90	85	17.5	0.6
JYT-150/20	LGJ-150/20	32	90	85	18.0	0.6
JYT-150/20	LGJ-150/25	30	90	85	18.5	0.6
JYT-185/10	LGJ-185/10	32	90	85	19.5	0.7
JYT-185/25	LGJ-185/25	32	90	85	20.5	0.7
JYT-185/30	LGJ-185/30	34	100	85	20.5	0.7
JYT-210/10	LGJ-210/10	34	100	85	20.5	0.7
JYT-210/25	LGJ-210/25	34	100	85	21.5	0.7
JYT-210/35	LGJ-210/35	34	100	85	22.0	0.7

本体为铝制件，其余为热镀锌钢制件。
Clamp body is aluminum, others are hot-dip galvanized steel.

D 电站金具
POWERSTATION FITTING

电站金具亦称大电流金具，包括在发电厂、变电所的电装置中固定，支持软导线，复导线及各种硬母线的金具。按所用母线类形分为矩形、槽形、管形母线和软母线固定金具。

产品型号中字母和数字的意义为：M:母线　N:户内　W:户外　P:平放　L:立放
G:管形、间隔　J:矩形　C:槽形
D:吊挂、单母线　S:双母线　Y:圆　H:环

数字表示母线大小、片数或序号。

使用电压在330KV及以上的固定金具，在1.05倍最高运行电压下无可见电晕。

Bus-bar supports are used to fix or hang bus-bars on insulators at the substation, include rectangular, channel, tube bus and cable supprts in accordanct with bus type.

The meanings of letter & Arabic figures in the catalon shown as follow.

M:bus　W:outdoor　G:tubular spacer　Y:round　P:horizontal mounting
J:rectangular　C:hannel　N:indoor　D:hanging single-cable　S: double bus
H:ring　L:vertical mountng

The Arabic figures show generatrixsize, number or serial mumber.

Pengyou
Pengyou power fitting

MNP户内一片矩形母线固定金具(平放式)
MNP INDOOR SUPPORT FITTING FOR SIGLE PIECE BAR (HOUIZONTAL SETTING)

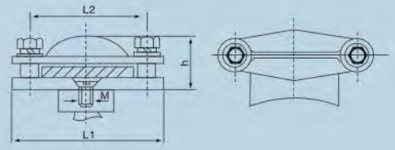

型号 Type	母线宽度 Bus width(mm)	主要尺寸 Dimnesions (mm)				重量 Weight(kg)
		M	h	L1	L2	
MNP-101	63	10	38	113	83	0.4
MNP-102	80	10	42	130	100	0.5
MNP-103	100	10	46	150	120	0.6
MNP-104	125	10	48	175	145	0.6
MNP-105	60	16	38	113	80	0.4
MNP-106	80	16	42	130	100	0.5
MNP-107	100	16	46	150	120	0.6
MNP-108	125	16	48	175	145	0.6

MNP户内二片矩形母线固定金具(平放式)
MNP INDOOR SUPPORT FITTING FOR TWO PIECE BAR (HOUIZONTAL SETTING)

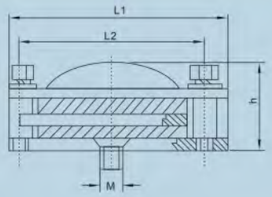

型号 Type	母线宽度 Bus width(mm)	主要尺寸 Dimnesions (mm)				重量 Weight(kg)
		M	h	L1	L2	
MNP-201	63	10	58	113	83	0.7
MNP-202	80	10	62	130	100	0.8
MNP-203	100	10	66	150	120	1.0
MNP-204	125	10	68	175	145	1.0
MNP-205	60	16	58	113	80	0.7
MNP-206	80	16	62	130	100	0.8
MNP-207	100	16	66	150	120	1.0
MNP-208	125	16	68	175	145	1.0

MNP户内三片矩形母线固定金具(平放式)
MNP INDOOR SUPPORT FITTING FOR THREE PIECE BAR (HOUIZONTAL SETTING)

型号 Type	母线宽度 Bus width(mm)	主要尺寸 Dimnesions (mm)				重量 Weight(kg)
		M	h	L1	L2	
MNP-301	63	10	78	113	83	0.9
MNP-302	80	10	82	130	100	0.9
MNP-303	100	10	86	150	120	1.2
MNP-304	125	10	88	175	145	1.3
MNP-305	60	16	78	113	80	0.8
MNP-306	80	16	82	130	100	0.9
MNP-307	100	16	86	150	120	1.1
MNP-308	125	16	88	175	145	1.2

MNP户内四片矩形母线固定金具(平放式)
MNP INDOOR SUPPORT FITTING FOR FOUR PIECE BAR (HOUIZONTAL SETTING)

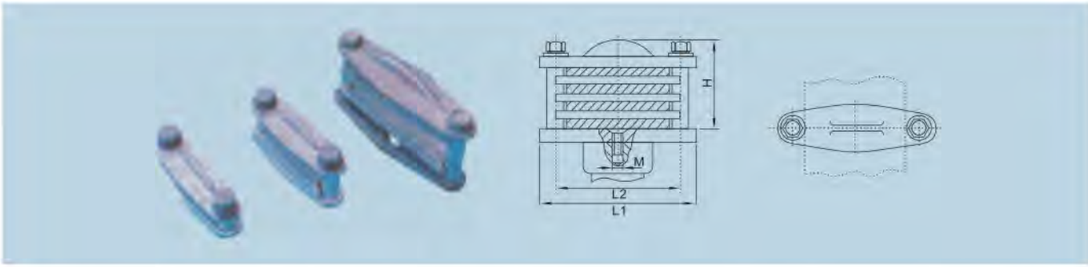

型号 Type	母线宽度 Bus width(mm)	主要尺寸 Dimnesions (mm)				重量 Weight(kg)
		M	h	L1	L2	
MNP-401	63	16	98	113	83	1.1
MNP-402	80	16	102	130	100	1.1
MNP-403	100	16	106	150	120	1.4
MNP-404	125	16	108	175	145	1.5
MNP-405	60	18	98	113	80	1.0
MNP-406	80	18	102	130	100	1.1
MNP-407	100	18	106	150	120	1.3
MNP-408	125	18	108	175	145	1.4

MWP 户外一片矩形母线固定金具(平放式)
MWP OUTDOOR SUPORT FITTING FOR SINGLE PIECE BAR(HOUIZONTAL SETTING)

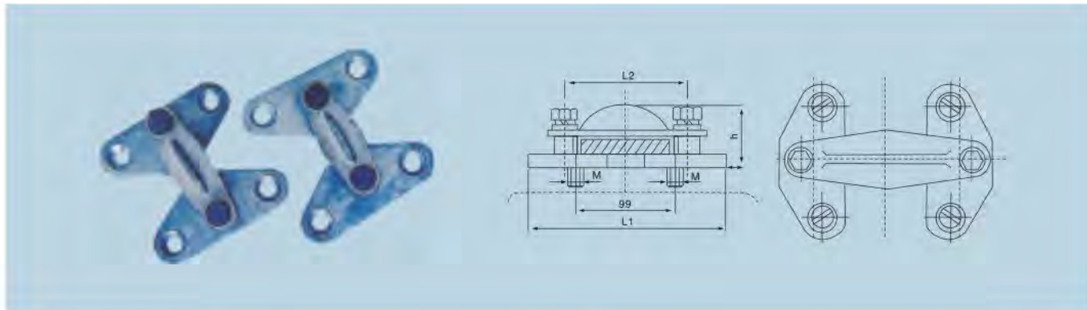

型号 Type	母线宽度 Bus width(mm)	主要尺寸 Dimnesions (mm)				重量 Weight(kg)
		M	h	L1	L2	
MWP-101	63	12	38	140	83	1.2
MWP-102	80	12	42	140	100	1.2
MWP-103	100	12	46	170	120	1.3
MWP-104	125	12	48	170	145	1.3

上盖板为铝合金件，其余为热镀锌钢制件。
The upper cover is aluminium alloy. The other parts are hot-dip galvanized steel.

MWP 户外二片矩形母线固定金具(平放式)
MWP OUTDOOR SUPORT FITTING FOR TWO PIECE BAR(HOUIZONTAL SETTING)

型号 Type	母线宽度 Bus width(mm)	主要尺寸 Dimnesions (mm)				重量 Weight(kg)
		M	h	L1	L2	
MWP-201	63	12	58	140	83	1.5
MWP-202	80	12	62	140	100	1.5
MWP-203	100	12	66	170	120	1.6
MWP-204	125	12	68	170	145	1.7

上盖板为铝合金件，其余为铝制作，其余为热镀锌钢制件。
The upper cover is aluminium alloy. The spacer is aluminium. The others parts are hot-dip galvanized steel.

MWP 户外三片矩形母线固定金具(平放式)

MWP OUTDOOR SUPORT FITTING FOR THREE PIECE BAR(HOUIZONTAL SETTING)

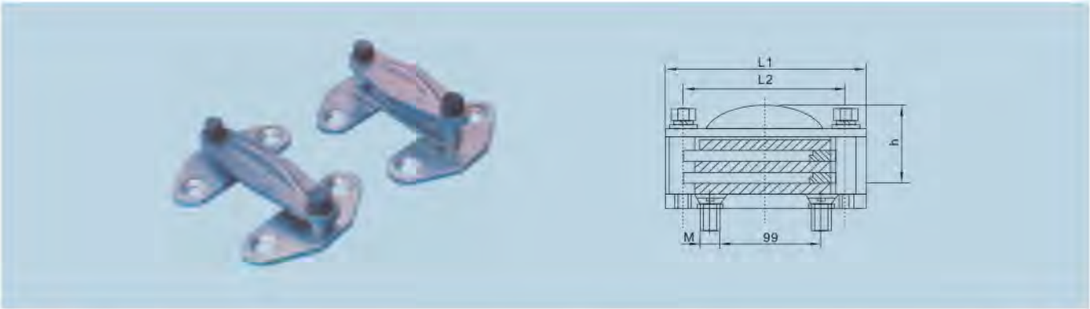

型号 Type	母线宽度 Bus width(mm)	主要尺寸 Dimnesions (mm)				重量 Weight(kg)
		M	h	L1	L2	
MWP-301	63	12	78	140	83	1.7
MWP-302	80	12	82	140	100	1.8
MWP-303	100	12	86	170	120	1.8
MWP-304	125	12	88	170	145	1.9

上盖板为铝合金件，其余为铝制作，其余为热镀锌钢制件。
The upper cover is aluminium alloy. The spacer is aluminium. The others parts are hot-dip galvanized steel.

MWP 户外四片矩形母线固定金具(平放式)

MWP OUTDOOR SUPORT FITTING FOR FOUR PIECE BAR(HOUIZONTAL SETTING)

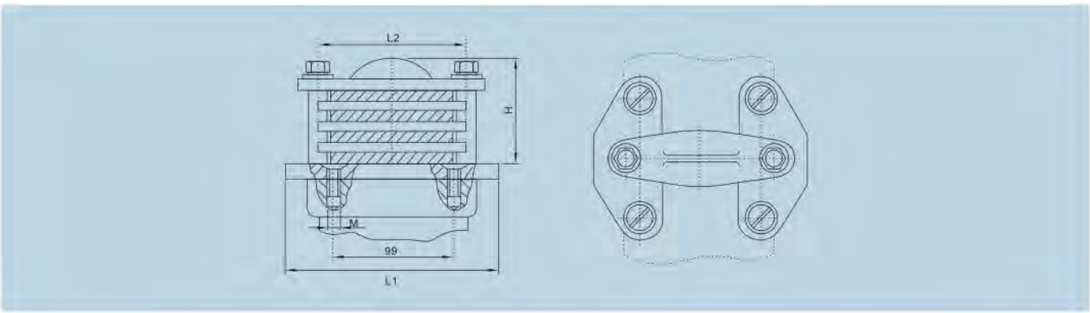

型号 Type	母线宽度 Bus width(mm)	主要尺寸 Dimnesions (mm)				重量 Weight(kg)
		M	h	L1	L2	
MWP-401	63	12	98	150	83	1.9
MWP-402	80	12	102	150	100	2.0
MWP-403	100	12	106	180	120	2.0
MWP-404	125	12	108	180	145	2.2

上盖板为铝合金件，其余为铝制作，其余为热镀锌钢制件。
The upper cover is aluminium alloy. The spacer is aluminium. The others parts are hot-dip galvanized steel.

MNL 户外一片矩形母线固定金具(立放式)

MNL INDOOR SUPPORT FITTING FOR SINGLE PIECE BAR (VERTICAL SETTING)

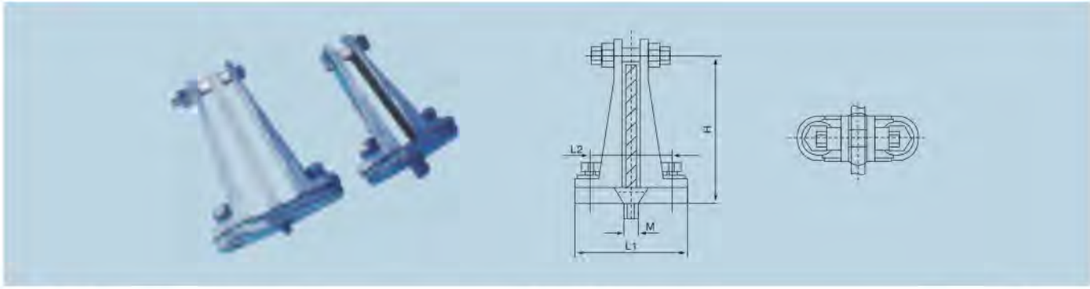

型号 Type	母线宽度 Bus width(mm)	主要尺寸 Dimnesions (mm)				重量 Weight(kg)
		M	h	L1	L2	
MNL-101	63	10	82	90	60	0.9
MNL-102	80	10	100	90	60	1.0
MNL-103	100	10	120	90	60	1.1
MNL-104	125	10	145	90	60	1.2
MNL-105	60	16	85	90	60	0.9
MNL-106	80	16	100	90	60	1.0
MNL-107	100	16	120	90	60	1.1
MNL-108	125	16	145	90	60	1.2

本体为铝合金件，其余为热镀锌钢制件。
The bodies are aluminium alloy. The other parts are hot-dip galvanized steel.

MNL 户外二片矩形母线固定金具(立放式)

MNL INDOOR SUPPORT FITTING FOR TWO PIECE BAR (VERTICAL SETTING)

型号 Type	母线宽度 Bus width(mm)	主要尺寸 Dimnesions (mm)				重量 Weight(kg)
		M	h	L1	L2	
MNL-201	63	10	82	113	83	0.9
MNL-202	80	10	100	113	83	1.0
MNL-203	100	10	120	113	83	1.1
MNL-204	125	10	145	113	83	1.2
MNL-205	60	16	85	113	83	0.9
MNL-206	80	16	100	113	83	1.0
MNL-207	100	16	120	113	83	1.1
MNL-208	125	16	145	113	83	1.2

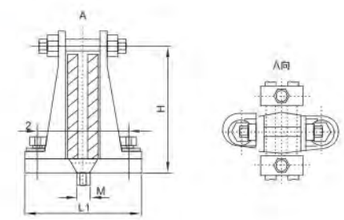

本体为铝合金件，其余为热镀锌钢制件。
The bodies are aluminium alloy. The other parts are hot-dip galvanized steel.

MNL 户外三片矩形母线固定金具(立放式)

MNL INDOOR SUPPORT FITTING FOR THREE PIECE BAR (VERTICAL SETTING)

型号 Type	母线宽度 Bus width(mm)	主要尺寸 Dimnesions (mm)				重量 Weight(kg)
		M	h	L1	L2	
MNL-301	63	10	82	113	83	0.9
MNL-302	80	10	100	113	83	1.0
MNL-303	100	10	120	113	83	1.1
MNL-304	125	10	145	113	83	1.2
MNL-305	60	16	85	113	83	0.9
MNL-306	80	16	100	113	83	1.0
MNL-307	100	16	120	113	83	1.1
MNL-308	125	16	145	113	83	1.2

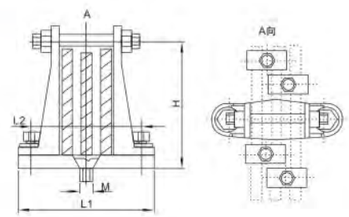

本体为铝合金件，其余为热镀锌钢制件。
The bodies are aluminium alloy. The other parts are hot-dip galvanized steel.

MWL 户外一片矩形母线固定金具(立放式)
MWL OUTDOOR SUPPORT FITTING FOR SINGLE PIECE BAR (VERTICAL SETTING)

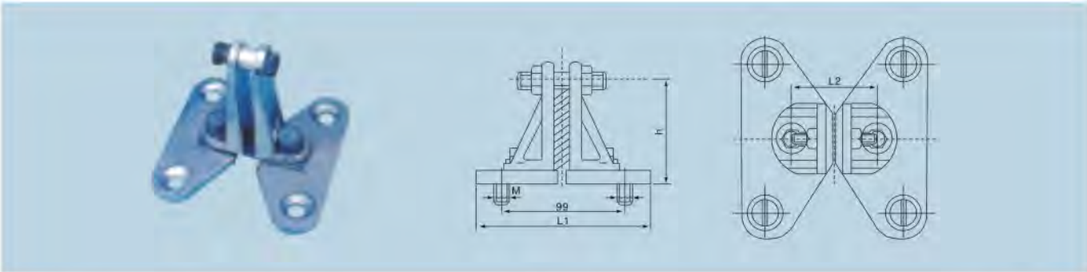

型号 Type	母线宽度 Bus width(mm)	主要尺寸 Dimnesions (mm)				重量 Weight(kg)
		M	h	L1	L2	
MWL-101	63	12	82	140	60	2.2
MWL-102	80	12	100	140	60	2.2
MWL-103	100	12	120	140	60	2.3
MWL-104	125	12	145	140	60	2.3

本体为铝合金件，其余为热镀锌钢制件。
The bodies are aluminium alloy. The other parts are hot-dip galvanized steel.

MWL 户外二片矩形母线固定金具(立放式)
MWL OUTDOOR SUPPORT FITTING FOR TWO PIECE BAR (VERTICAL SETTING)

型号 Type	母线宽度 Bus width(mm)	主要尺寸 Dimnesions (mm)				重量 Weight(kg)
		M	h	L1	L2	
MWL-201	63	12	58	140	83	2.2
MWL-202	80	12	62	140	100	2.2
MWL-203	100	12	66	140	120	2.3
MWL-204	125	12	68	140	145	2.3

本体为铝合金件，隔板为铝制作，其余为热镀锌钢制件。
The bodies are aluminium alloy. The other parts are hot-dip galvanized steel.

MWL 户外三片矩形母线固定金具(立放式)
MWL OUTDOOR SUPPORT FITTING FOR THREE PIECE BAR (VERTICAL SETTING)

型号 Type	母线宽度 Bus width(mm)	主要尺寸 Dimnesions (mm)				重量 Weight(kg)
		M	h	L1	L2	
MWL-301	63	12	82	140	100	2.2
MWL-302	80	12	100	140	100	2.3
MWL-303	100	12	120	140	100	2.3
MWL-304	125	12	145	140	100	2.4

本体为铝合金件，隔板为铝制作，其余为热镀锌钢制件。
The bodies are aluminium alloy. The other parts are hot-dip galvanized steel.

MJG 矩形母线间隔垫
MJG RECTANGULAR BUS-BAR SEPARATOR

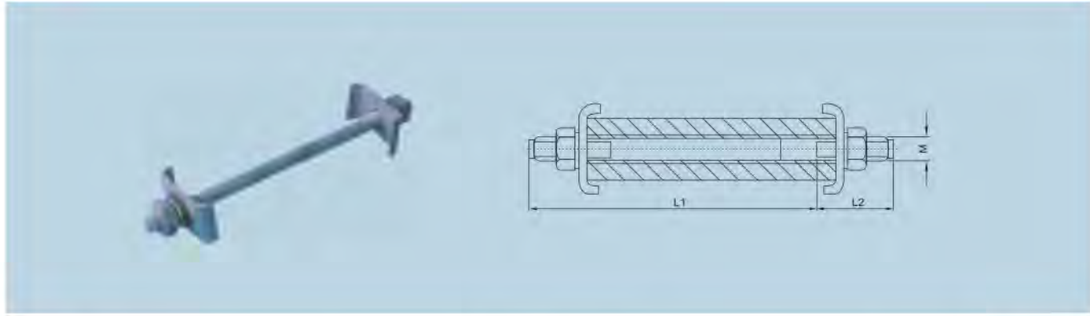

型号 Type	主要尺寸 Dimnesions (mm)			重量 Weight(kg)
	M	L1	L2	
MJG-01	10	100	26	0.1
MJG-02	10	120	26	0.1
MJG-03	10	140	26	0.2
MJG-04	10	160	26	0.2

热镀锌钢制件。
All parts are hot-dip galvanized steel.

MCG 槽型母线间隔垫
MCG WEPARATORS FOR CHANNEL BAR

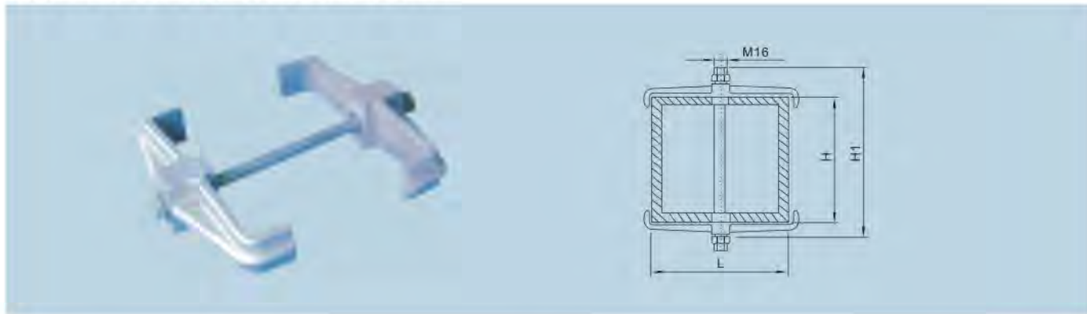

型号 Type	母线宽度 Bus width(mm)	主要尺寸 Dimnesions (mm)			重量 Weight(kg)
		L	H	H1	
MNG-01	200	214	200	300	1.9
MNG-02	225	244	225	320	2.1
MNG-03	250	264	250	380	2.2

注：压板为铝合金制作，其余为热镀锌钢制作。

MCD 槽形母线吊挂金具
MCD HANGING SUPPORT FITTING FOR CHANNEL BAR

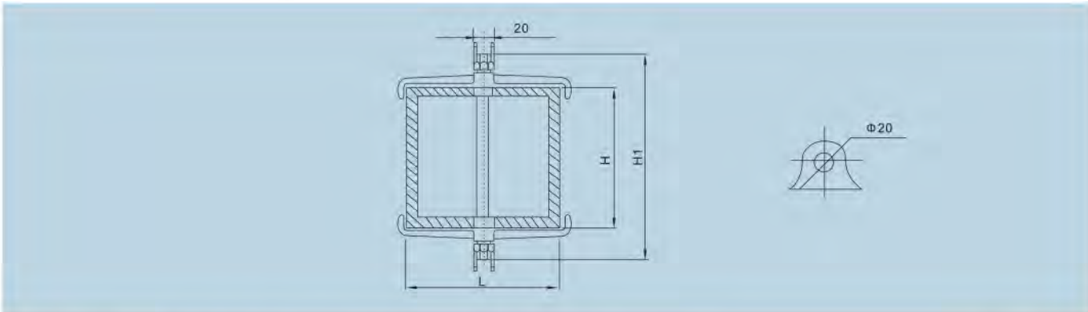

型号 Type	母线宽度 Bus width(mm)	主要尺寸 Dimnesions (mm)			重量 Weight(kg)
		L	H	H1	
MCD-01	200	214	200	306	5.3
MCD-02	225	244	225	330	5.6
MCD-03	250	264	250	356	5.9

注：压板为铝合金制作，其余为热镀锌钢制作。

MCN 槽形母线户内固定金具
MCN INDOOR SUPPORT FITTING FOR CHANNEL BAR

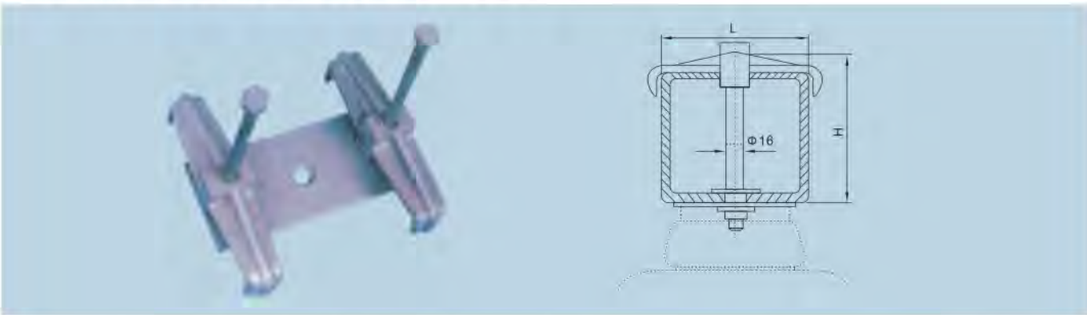

型号 Type	母线宽度 Bus width(mm)	主要尺寸 Dimnesions (mm)		重量 Weight(kg)
		H	L	
MCN-100	100	132	200	3.9
MCN-125	125	157		4.0
MCN-150	150	182		4.1
MCN-175	175	207		4.2
MCN-200	200	232		4.3
MCN-225	225	257		4.4
MCN-250	250	282		4.6

注：压板为铝合金制作，其余为热镀锌钢制作。

MCW 槽形户外固定金具
MCW OUTDOOR SUPPORT FITTING FOR CHANNEL BAR

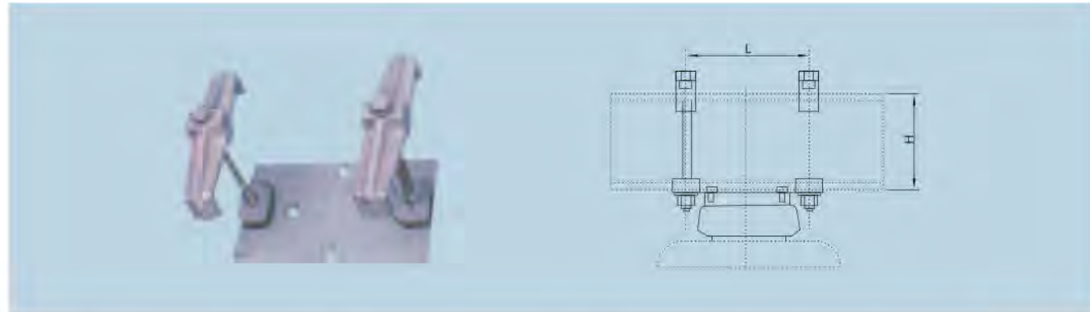

型号 Type	母线宽度 Bus width(mm)	主要尺寸 Dimnesions (mm)		重量 Weight(kg)
		H	L	
MCW-100	100	132	250	5.6
MCW-125	125	157		5.7
MCW-150	150	182		5.8
MCW-175	175	207		6.0
MCW-200	200	232		6.1
MCW-225	225	257		6.3
MCW-250	250	282		6.5

注：压板为铝合金制作，其余为热镀锌钢制作。

MGG 固定金具
MGG SEPARATORS FOR CHANNEL BAR

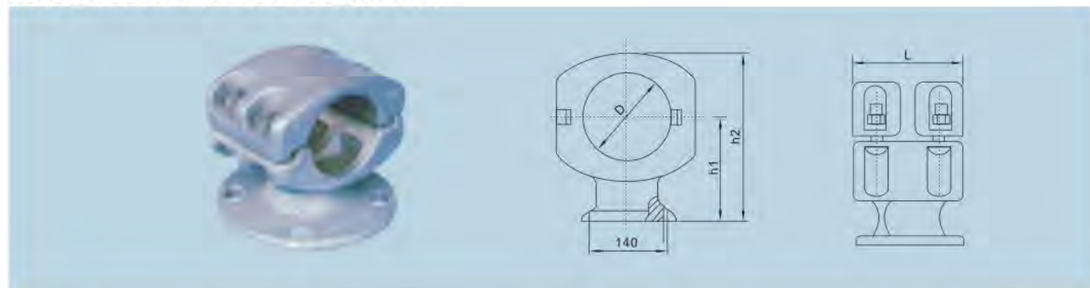

型号 Type	母线宽度 Bus width(mm)	主要尺寸 Dimnesions (mm)				重量 Weight(kg)
		D	h1	h2	L	
MGG-70	ϕ70	74	90	142	110	2.8
MGG-80	ϕ80	84	98	154	110	4.0
MGG-90	ϕ90	94	102	160	110	4.3
MGG-100	ϕ100	104	114	180	130	4.5
MGG-120	ϕ120	124	122	190	130	5.3
MGG-130	ϕ130	134	135	220	150	7.3
MGG-150	ϕ150	225	150	246	170	8.4
MGG-170	ϕ170	225	170	280	190	9.0
MGG-200	ϕ200	225	190	300	190	9.4
MGG-250	ϕ250	225	190	300	190	9.6

本体和压板为铝合金制作，其余为热镀锌钢制作。 The body and keeper aluminium. The other parts are bot-dip galvanized steel.

MGJ 支架
MGJ BRACKET

型号 Type	母线宽度 Bus width(mm)	主要尺寸 Dimnesions (mm)					重量 Weight(kg)
		L	A	ϕ1	ϕ2	b	
MGJ-104	MGG-70	1040	170	127~140	–	6	14.0
	MGG-80						
	MGG-90						
	MGG-100						
	MGG-120						
MGJ-110	MGG-130	1100	225	127~140	225	8	21.5
	MGG-150						
MGJ-115	MGG-130	1150	250	127~140	225	8	24.1
	MGG-150						
	MGG-170						

热镀锌钢制件。
All parts are hot-dip galvanized steel.

MDG 单母线
MDG SUPPORTS FOR SINGLE-BAR

型号 Type	导线外径 Condrctor(mm)	主要尺寸 Dimnesions (mm)		重量 Weight(kg)
		R	H	
MDG-4	18.1-22.0	11	27	0.7
MDG-5	23.0-29.0	14	30	0.7
MDG-6	29.1-35.0	17	33	0.7

本体和压板为铝合金制件，其余为热镀锌钢制件。
The body and deeper are aluminium alloy. The other parts are hot-dip galvanized steel.

YH 组合圆环
YH RING SUPPORTS FOR BUNDLE CONDUCTORS

型号 Type	导线外径 Condrctor(mm)			主要尺寸 Dimnesions (mm)				重量 Weight(kg)
	承重导线	截流导线		D	h	L1	L2	
YH(2+8)	2XLGJ-185/10	8		120	220	210	390	2.3
YH(2+12)	2XLGJ-240/30	12	LJ-120	160	260	250	330	2.8
YH(2+16)	2XLGJ-300/15	16	LJ-150	200	300	290	370	3.6
YH(2+20)	2XLGJ-400/20	20	LJ-185	240	340	330	410	4.1
YH(2+24)		24		280	380	380	450	4.7

压板为铝合金制作，其余为热镀锌钢制件。
Conductor keeper are aluminium alloy. The other parts are hot-dip galvanized steel.

MSG 双母线
MSG SUPPORTS FOR DOUBLE-BAR

型号 Type	母线宽度 Bus width(mm)	主要尺寸 Dimnesions (mm)				重量 Weight(kg)
		a	R	h	L	
MSG-4/120	19.02~21.28	50	11	44	120	1.6
MSG-5/120	23.70~27.36	60	14	47	120	1.8
MSG-6/120	30.16~33.20	70	17	50	120	1.9
MSG-4/200	19.02~21.23	50	11	44	200	1.6
MSG-5/200	23.70~27.36	60	14	47	200	1.7
MSG-6/200	30.16~33.20	70	17	50	200	1.8
MSG-4/400	19.02~21.23	50	11	44	400	2.8
MSG-5/400	23.70~27.36	60	14	47	400	3.1
MSG-6/400	30.16~33.20	70	17	50	400	3.4

本体和压板为铝合金制作，其余为热镀锌钢制作。
The body and deeper are aluminium alloy. The other parts are hot-dip galvanized steel.

MGGH 活动式固定金具
MGGH MOVBLE SUPPORT FITTING

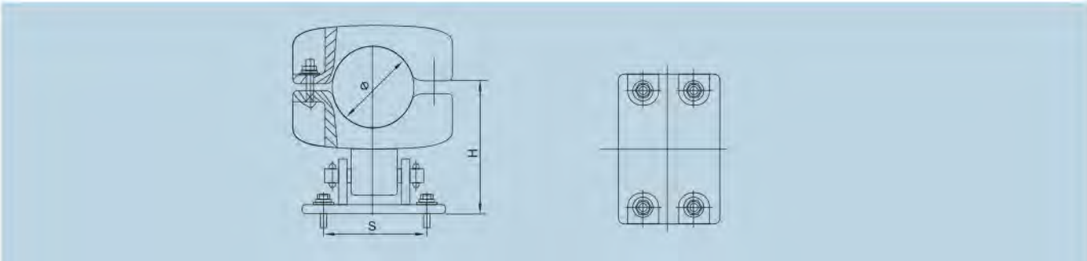

型号 Type	母线宽度 Bus width(mm)	主要尺寸 Dimnesions (mm)			重量 Weight(kg)
		H	S	Φ	
MGGH-70	Φ70/64	110	140	70	4.5
MGGH-80	Φ80/64	115	140	80	5.0
MGGH-90	Φ90/80	120	140	90	5.4
MGGH-100	Φ100/90	135	140	100	6.0
MGGH-120	Φ120/112	145	140	120	6.5
MGGH-130	Φ130/116	150	140	130	7.0
MGGH-150	Φ150/136	160	225	150	7.7
MGGH-170	Φ170/156	180	225	170	9.5

注：压板为铝合金制作，其余为热镀锌钢制作。
All parts are hot-dip galvanized steel.

MGD 端部固定金具
MGD SUPPORTS FITTING

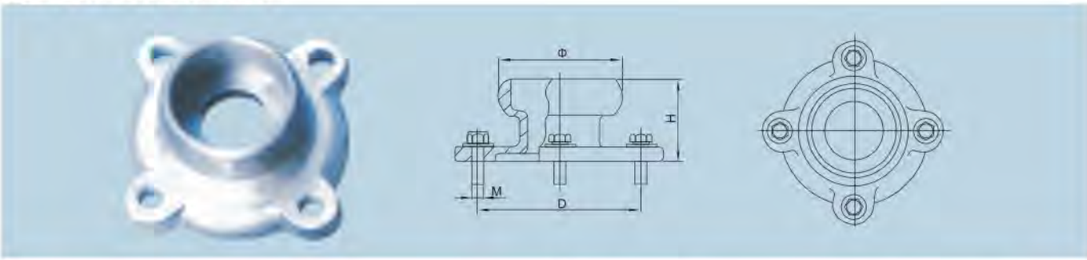

型号 Type	母线宽度 Bus width(mm)	主要尺寸 Dimnesions (mm)				重量 Weight(kg)
		D	M	H	Φ	
MGD-70×140	Φ70/64	140	12	82	96	1.7
MGD-80×140	Φ80/64	140	12	82	108	1.8
MGD-100×140	Φ100/90	140	12	108	128	1.9
MGD-70×190	Φ70/64	190	12	85	96	2.0
MGD-80×190	Φ80/654	190	12	85	108	2.1
MGD-100×190	Φ100/90	190	12	88	128	2.2
MGD-70×225	Φ70/64	225	16	86	96	2.2
MGD-80×225	Φ80/64	225	16	86	108	2.3
MGD-100×225	Φ100/90	225	16	96	128	2.4

本体和压板为铝合金制作，其余为热镀锌钢制作。
The body and keeper aluminium. The other parts are bot-dip galvanized steel.

MGZ 管形母线终端球
MGZ END-CAPS FOR TUBULAR BAR

型号 Type	母线宽度 Bus width(mm)	主要尺寸 Dimnesions (mm)					重量 Weight(kg)
		D	R	L	I	M	
MGZ-130	Φ130/116	116	90	205	25	10	2.6
MGZ-150	Φ150/136	136	150	265	30	10	5.0
MGZ-170	Φ170/156	156	170	360	30	10	5.2
MGZ-200	Φ200/180	180	180	380	40	12	5.8
MGZ-250	Φ250/230	230	230	400	40	12	6.4

MGF 管形母线封头
MGF END-CAPS FOR TUBULAR BAR

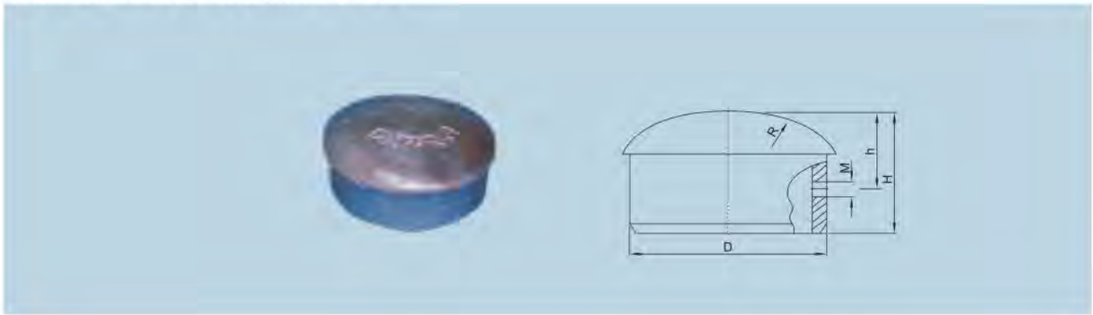

型号 Type	母线宽度 Bus width(mm)	主要尺寸 Dimnesions (mm)					重量 Weight(kg)
		D	R	H	h	M	
MGF-70	Φ70/64	64	70	42	30	8	0.2
MGF-80	Φ80/64	74	70	50	35	8	0.2
MGF-90	Φ90/80	80	80	55	35	8	0.6
MGF-100	Φ100/90	90	90	60	40	8	0.5
MGF-120	Φ120/112	112	120	65	40	10	0.6
MGF-130	Φ130/116	116	120	65	40	10	0.7
MGF-150	Φ150/136	136	150	70	40	10	1.0
MGF-170	Φ170/150	156	160	80	45	10	1.2
MGF-250	Φ250/230	230	180	85	50	10	1.4

MG0° 双T型线夹
0° DUBLE T-CONNRCTROS

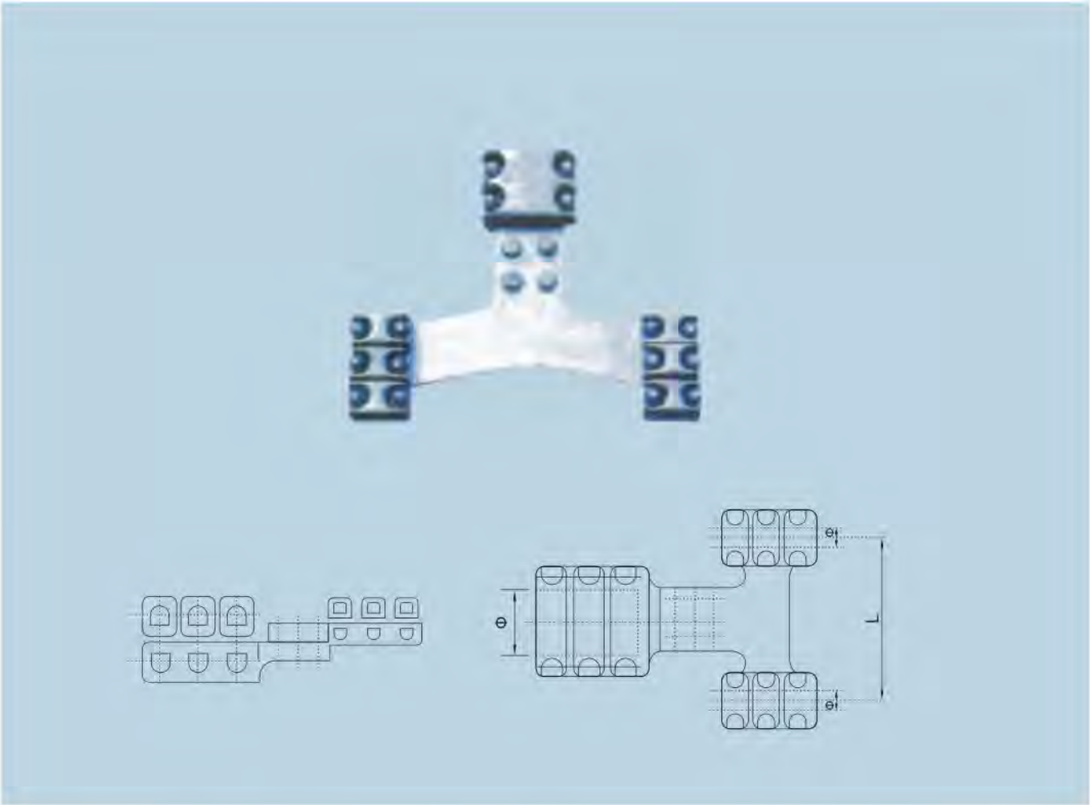

型号 Type	适用导线 Applicable bus		主要尺寸 Dimnesions (mm)		
	管母线规格 Specification	软母线型号 Size	Φ	Φ1	L
MG/MR-70A	Φ76/64	用户自选导线型号 Conductor	70	根据选用导线制作 To made accordance with the chose of conductor	400
MG/MR-80A	Φ80/74		80		
MG/MR-90A	Φ90/80		90		
MG/MR-100A	Φ100/90		100		
MG/MR-110A	Φ110/102		110		
MG/MR-120A	Φ120/112		120		
MG/MR-130A	Φ130/116		130		

注：线夹本体及本体为铝合金制作，其余为热镀锌钢制作。

MG30° 双T型线夹
30° DUBLE T-CONNRCTROS

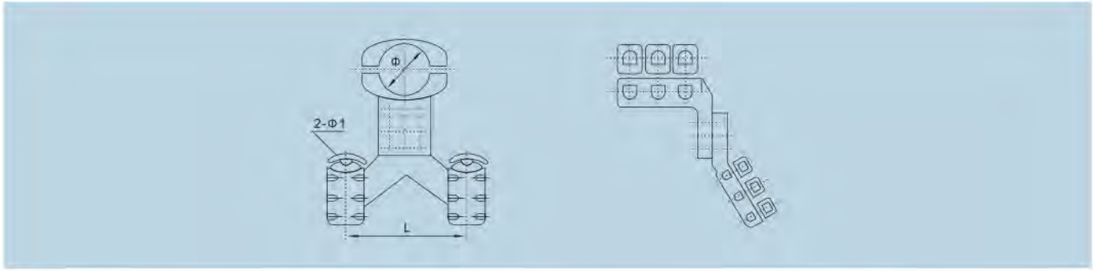

型号 Type	适用导线 Applicable bus		主要尺寸 Dimnesions (mm)		
	管母线规格 Specification	软母线型号 Size	Φ	Φ1	L
MG/MR-70B	Φ70/64	用户自选导线型号 Conductor	70	根据选用导线制作 To made accordance with the chose of conductor	400
MG/MR-80B	Φ80/64		80		
MG/MR-90B	Φ90/80		90		
MG/MR-100B	Φ100/90		100		
MG/MR-110B	Φ120/112		110		
MG/MR-120B	Φ130/116		120		
MG/MR-130B	Φ150/136		130		
MG/MR-150B	Φ170/150		150		
MG/MR-170B	Φ250/230		170		

注：线夹本体及本体为铝合金制作，其余为热镀锌钢制作。

MG90° 双T型线夹
90° DUBLE T-CONNRCTROS

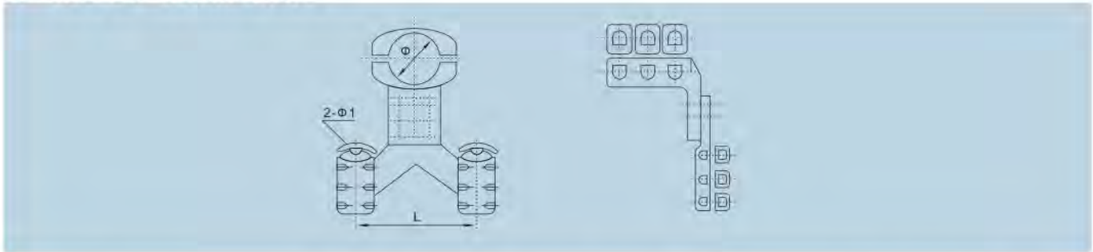

型号 Type	适用导线 Applicable bus		主要尺寸 Dimnesions (mm)			重量 Weight(kg)
	管母线规格 Specification	软母线型号 Size	Φ	Φ1	L	
MG/MR-70C	Φ70/64	用户自选导线型号 Conductor	70	根据选用导线制作 To made accordance with the chose of conductor	400	18
MG/MR-80C	Φ80/64		80			19
MG/MR-90C	Φ90/80		90			19.5
MG/MR-100C	Φ100/90		100			20
MG/MR-110C	Φ110/102		110			
MG/MR-120C	Φ120/112		120			20.5
MG/MR-130C	Φ130/116		130			22.5
MG/MR-150C	Φ150/136		150			
MG/MR-170C	Φ170/156		170			

注：线夹本体及本体为铝合金制作，其余为热镀锌钢制作。

管母线T型线夹(A类)
TUBING BUS-BAR T-CONNRCTROS

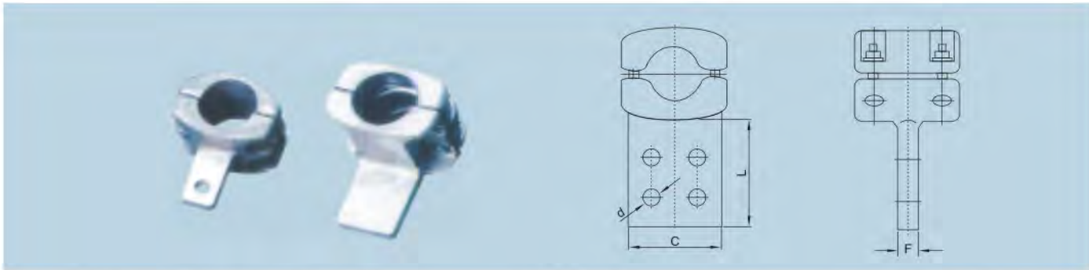

型号 Type	适用导线 Conductor	主要尺寸 Dimnesions (mm)				重量 Weight(kg)
		L	C	F	d	
MGT-100A	Φ100/90	105	100	16	14	3.6
MGT-110A	Φ110/100	105	100	16	14	4.0
MGT-120A	Φ120/112	105	100	18	14	4.6
MGT-130A	Φ130/116	125	125	18	14	5.6
MGT-150A	Φ150/136	125	125	16	18	7.0
MGT-170A	Φ170/156	125	100	16	18	7.5

线夹本体及本体为铝合金制作，其余为热镀锌钢制作。

管母线T型线夹
TUBING BUS-BAR T-CONNRCTROS

型号 Type	适用导线 Conductor	主要尺寸 Dimnesions (mm)				重量 Weight(kg)
		L	C	F	d	
MGT-50	Φ50/44	90	80	14	14	2.0
MGT-70	Φ70/64	85	80	16	14	2.4
MGT-80	Φ80/74	85	80	16	14	4.0
MGT-90	Φ90/80	105	100	18	18	4.2
MGT-100	Φ100/90	105	100	18	18	4.4
MGT-110	Φ110/100	105	100	18	18	5.0
MGT-120	Φ120/112	125	100	18	18	5.2
MGT-130	Φ130/116	125	125	20	18	7.2
MGT-150	Φ150/136	125	125	20	18	8.2
MGT-170	Φ170/156	155	150	25	18	11.5
MGT-250	Φ250/230	205	100	20	18	11.4
MGT-150.1	Φ150/136	160	150	30	18	12.3

线夹本体及本体为铝合金制作，其余为热镀锌钢制作。

E 线路金具
CIROUIT FITTING

悬垂线夹 SUSPENSION CLAMPS

悬垂线夹主要用于架空电力线路或变电所，通过联接金具将导线、避雷线悬挂在绝缘子上或将避雷线悬挂在杆塔上。悬垂线夹本体材料有可锻铸铁、高强度铝合金两种材料制造。

产品型号中字母数字的意义为：

X-悬垂线夹　G-固定型　U-U型螺栓

A-带碗头挂板　B-带U型挂板

F-防电晕型　J-加强型　K-上扛式

数字表示适用导线组合号。

悬垂线夹用于铝绞线和钢芯铝绞线时，可在导线外缠绕铝包带或护线条，以保护导线，其适用导线外径包括包缠物。

Suspension clamps are used to hang conductor or ground wire through insulators or link fitting to tower arms or substation structures. Body material of suspension clamp is made of malleable cast iron and high strength A1-alloy.

The meanings of the letter & arabic figure in the catalog are shown as follow,

X-suspension clamp　G-fixed　U-U bolt　A-with a socket-clevis

B-with U clevis　F-corona control　J-strength type　K-under axle type

The figures mean the of assembled leads which apply to each other numbers.

As the suspension clamps are used to AAC and ACSR, the conductor may be-wound by aluminium tapes or preformed armour rods for protecting these taps or rods are included in the diameter of suitable conductor.

XGU悬垂线夹(带碗头挂板)
SUSPENSION CLAMPS (WITH SOCKET-CLEVIS)

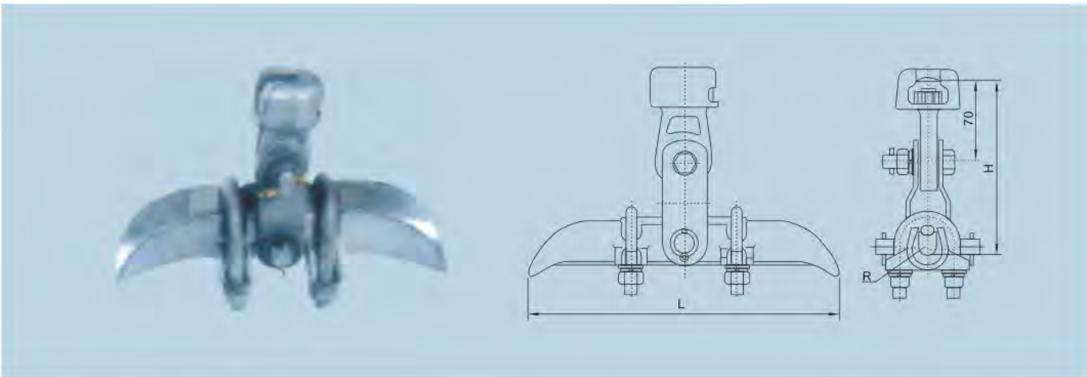

型号 Type	适用绞线直径范围 Suitable Conductor(mm)	主要尺寸 Dimnesions (mm)			破坏荷重不小于 Ultimate load not less than(kN)	重量 Weight(kg)
		L	H	R		
XGU-5A	23.0~33.0	300	157	17	60	5.7
XGU-6A	34.0~45.0	300	163	23	60	6.1

XGU悬垂线夹(带U型挂板)
SUSPENSION CLAMPS (WITH CLEVIS)

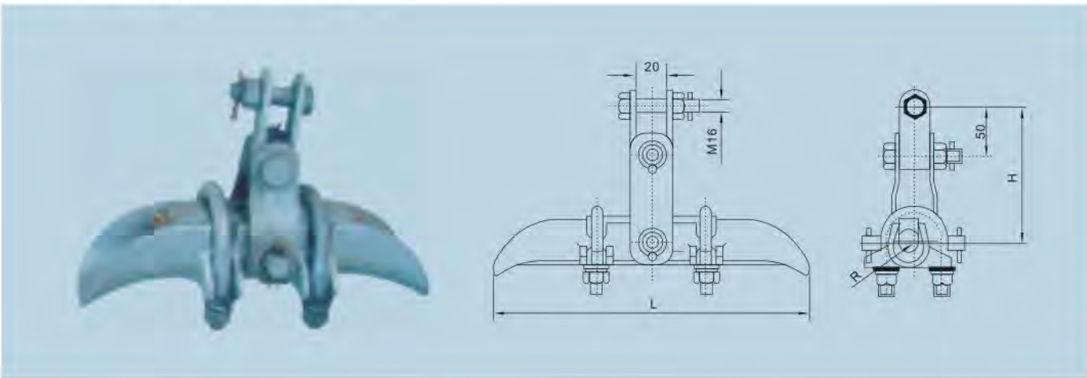

型号 Type	适用绞线直径范围(包括加包缠物) Suitable Conductor(with wraps)(mm)	主要尺寸 Dimnesions (mm)			破坏荷重不小于 Ultimate load not less than(kN)	重量 Weight(kg)
		L	H	R		
XGU-5B	23.0~33.0	300	137	17	60	5.4
XGU-6B	34.0~45.0	300	143	23	60	5.8
XGU-7B	45.0~48.7	300	146	26	60	5.4

XGU可锻铸铁悬垂线夹
MALLEABLE CAST-IRON CUSPENSION CLAMPS

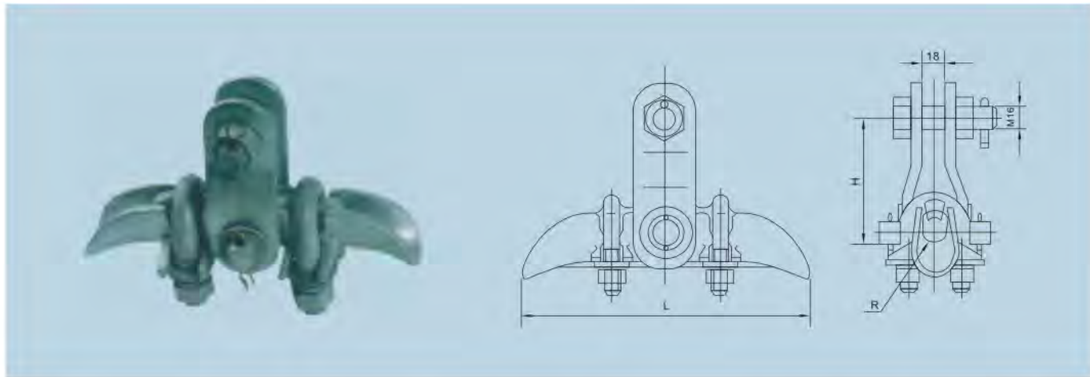

型号 Type	适用绞线直径范围(包括加包缠物) Suitable Conductor(with wraps)(mm)	主要尺寸 Dimnesions (mm)			破坏荷重不小于 Ultimate load not less than(kN)	重量 Weight(kg)
		H	L	R		
XGU-1	5.0~7.0	82.5	180	4.0	≥40	1.4
XGU-2	7.10~13.0	82	200	7.0	≥40	1.8
XGU-3	13.1~21.0	101	220	11.0	≥40	2.0
XGU-4	21.1~26.0	109	250	13.5	≥40	3.0

XGU悬垂线夹(防磨型)
SUSPENSION CLAMPS (ABRASION-PROOF TYPE)

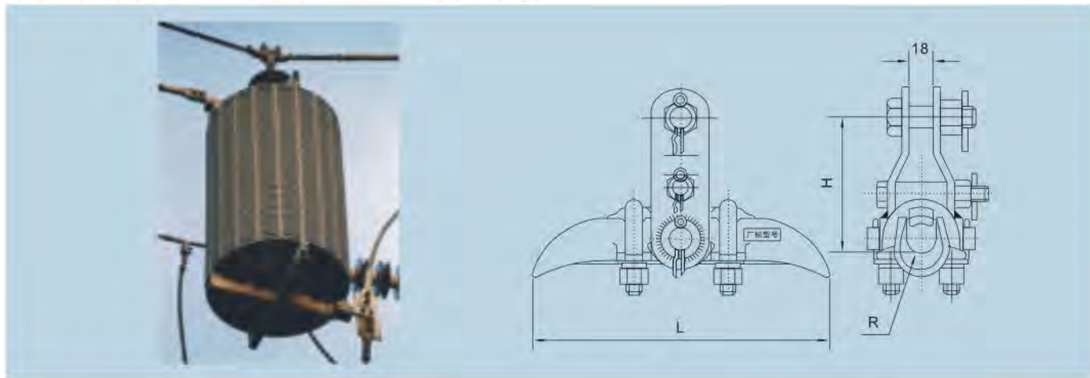

型号 Type	适用绞线直径范围(包括加包缠物) Suitable Conductor(with wraps)(mm)	主要尺寸 Dimnesions (mm)			破坏荷重不小于 Ultimate load not less than(kN)	重量 Weight(kg)
		H	L	R		
XGU-1F	5.0~7.0	82.5	180	4.0	40	1.65
XGU-2F	7.10~13.0	82	200	8.5	40	2.5
XGU-3F	13.1~21.0	101	220	11.0	40	2.8
XGU-4F	21.1~26.0	109	250	13.5	40	3.3

XFZ悬垂线夹
SUSPENSION CLAMPS

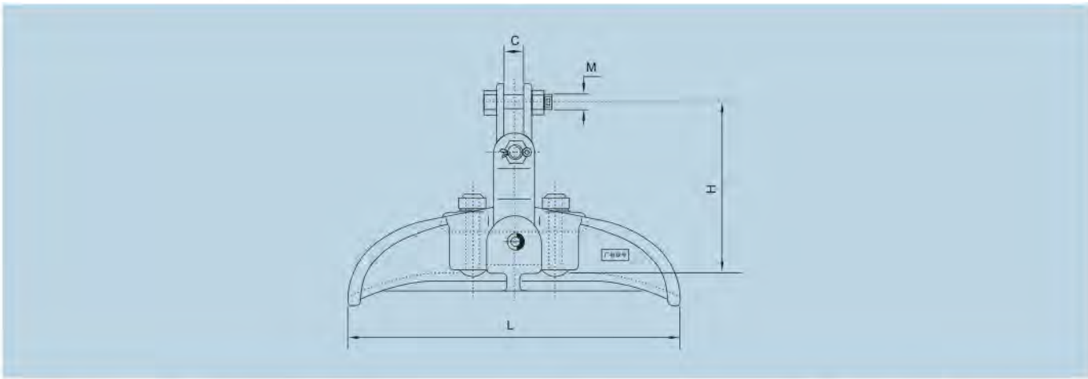

型号 Type	适用绞线直径范围 Suitable Conductor(mm)	主要尺寸 Dimnesions (mm)				破坏荷重不小于 Ultimate load not less than(kN)	重量 Weight(kg)
		L	H	C	M		
XFZ-10054	LGJ-720/50	211	418	24	18	100	10.3

XGJ悬垂线夹(加强型)
SUSPENSION CLAMPS(STRENGTHRNED TYPE)

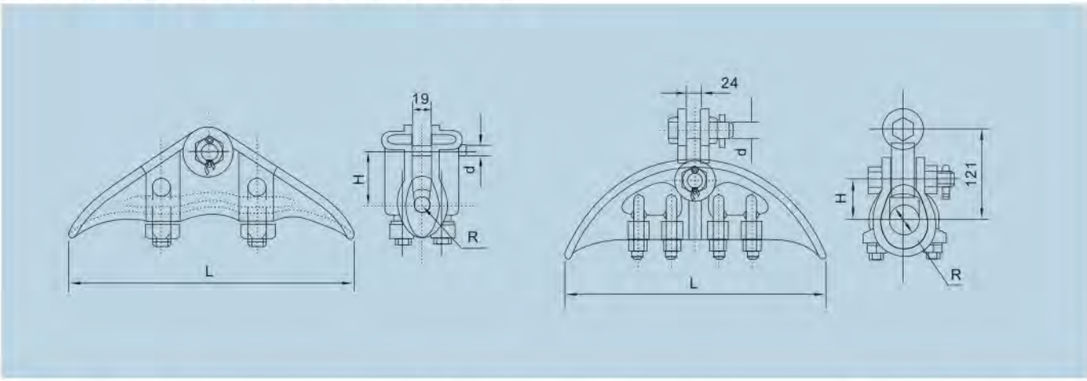

型号 Type	适用绞线直径范围(包括加包缠物) Suitable Conductor(with wraps)(mm)	主要尺寸 Dimnesions (mm)				破坏荷重不小于 Ultimate load not less than(kN)	重量 Weight(kg)
		d	H	R	L		
XGJ-2	11.0~13.0	18	52	8	300	90	3.8
XGJ-5	23.0~43.0	22	56	22	390	120	9.0

XGJ悬垂线夹(提包式)
SUSPENSION CLAMPS(ENVELOPE)

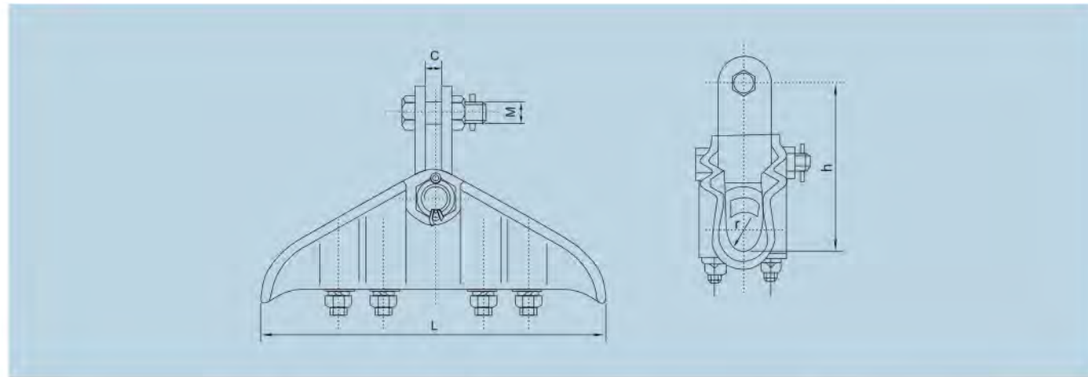

型号 Type	适用导线 Suitable Conductor	主要尺寸 Dimnesions (mm)					破坏荷重不小于 Ultimate load not less than(kN)	重量 Weight(kg)
		h	c	M	r	L		
XGU-95/140	LGJ-95/140	134	20	16	13	340	70	6.7
XGU-5H	HLGJJ-400	202	26	24	22	400	120	13.5
XGU-3HT	HLGJJ-150	187	24	22	20	390	100	12.4
XGU-2.1	GJ-80	140	20	16	85	200	40	5.5

XGF-X悬垂线夹(上扛式)
SUSPENSION CLAMPS

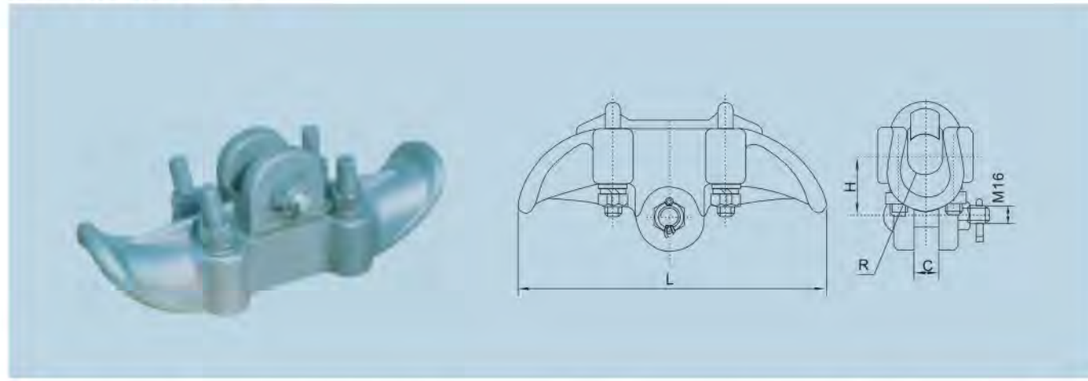

型号 Type	适用绞线直径范围(包括加包缠物) Suitable Conductor(with wraps)(mm)	主要尺寸 Dimnesions (mm)				破坏荷重不小于 Ultimate load not less than(kN)	重量 Weight(kg)
		C	H	L	R		
XGF-5K	23.7~27.6	24	55	300	17.0	60	2.38
XGF-7K	35.0~44.0	24	65	300	22	70	4.9

XGF-X悬垂线夹(下垂式)
SUSPENSION CLAMPS

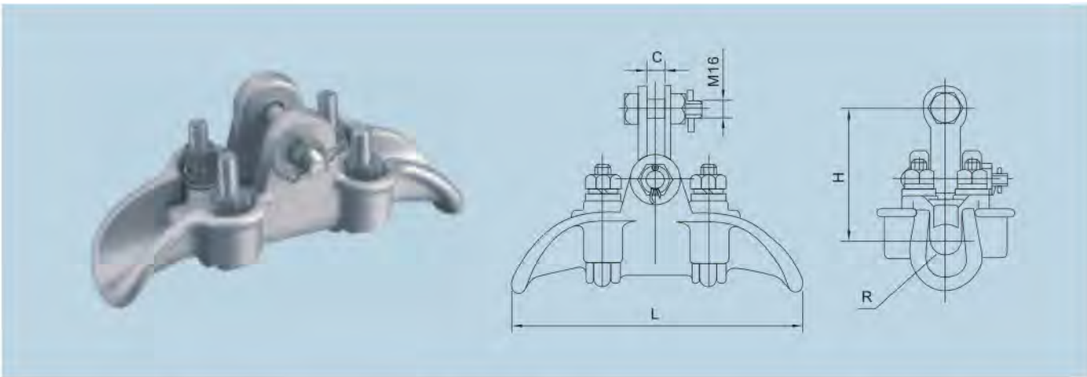

型号 Type	适用绞线直径范围(包括加包缠物) Suitable Conductor(with wraps)(mm)	主要尺寸 Dimnesions (mm)				破坏荷重不小于 Ultimate load not less than(kN)	重量 Weight(kg)
		C	H	L	R		
XGF-5X	23.7~27.6	18	147	300	17.0	60	3.55
XGF-6X	35.0~44.0	20	135	300	22.0	75	4.5
XGF-7X	45.0~48.7	18	135	300	26	60	4.85

XGF-5X/GH悬垂线夹
SUSPENSION CLAMPS

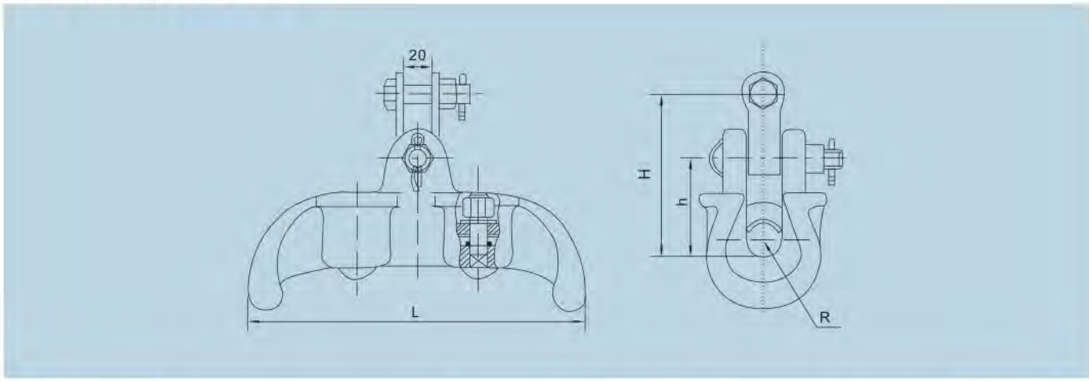

型号 Type	适用绞线直径范围(包括加包缠物) Suitable Conductor(with wraps)(mm)	主要尺寸 Dimnesions (mm)				破坏荷重不小于 Ultimate load not less than(kN)	重量 Weight(kg)
		L	H	H	R		
XGF-5X/GH	23.0~29.0	300	146	88.5	16	60	4.8

XGF-9X/GH悬垂线夹
SUSPENSION CLAMPS

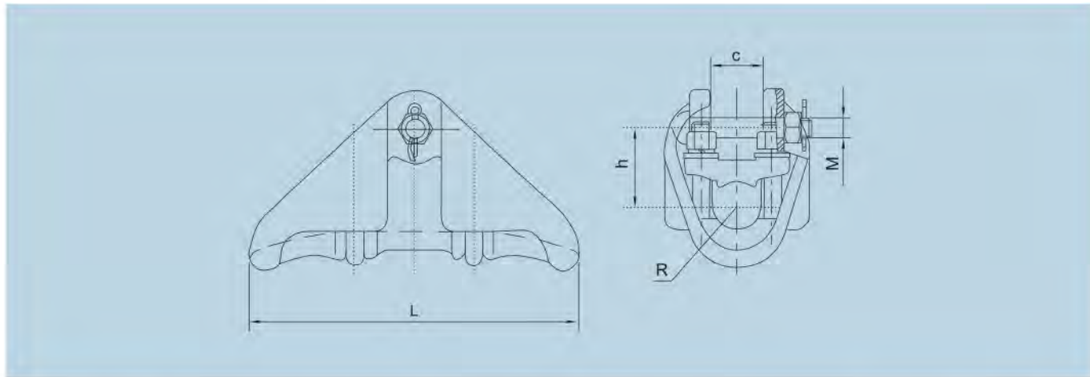

型号 Type	适用绞线直径范围(包括加包缠物) Suitable Conductor(with wraps)(mm)	主要尺寸 Dimnesions (mm)					破坏荷重不小于 Ultimate load not less than(kN)	重量 Weight(kg)
		L	c	h	R	M		
XGF-9X/GH	35.0~44.0	300	48	70	22	18	90	4.51

XGF悬垂线夹(提包式)
SUSPENSION CLAMPS(ENVELOPE TYPE)

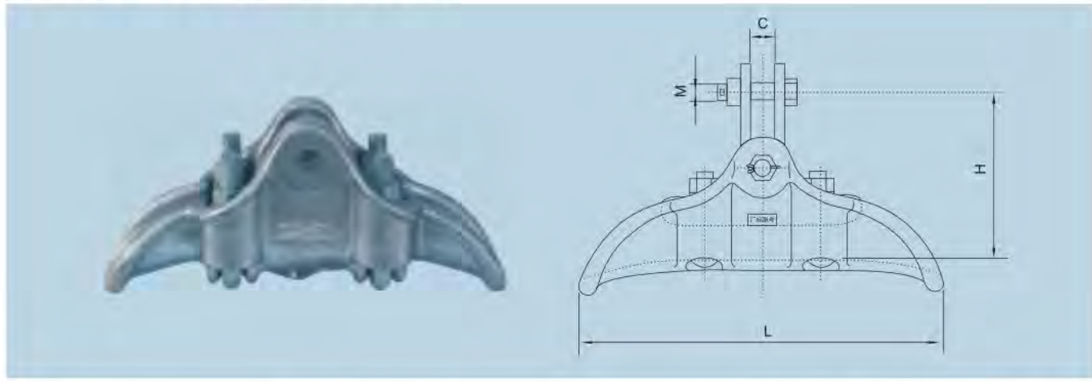

型号 Type	适用导线 Suitable Conductor	主要尺寸 Dimnesions (mm)				破坏荷重不小于 Ultimate load not less than(kN)	重量 Weight(kg)
		L	H	C	M		
XGF-8038	LGJ-720/50	330	155	22	16	80	4.5

XGF悬垂线夹
SUSPENSION CLAMPS

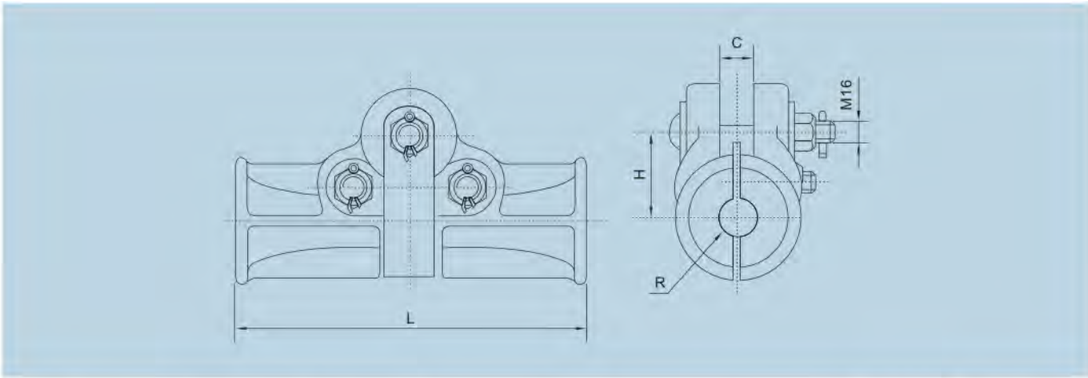

型号 Type	适用绞线直径范围(包括加包缠物) Suitable Conductor(with wraps)(mm)	主要尺寸 Dimnesions (mm)				破坏荷重不小于 Ultimate load not less than(kN)	重量 Weight(kg)
		C	H	L	R		
XGF-300	23.76	24	60	250	13.0	40	3.0
XGF-1400	51.00	24	63	240	26.5	40	2.8

CGH悬垂线夹(铝合金、提包式)
SUSPENSION CLAMPS(ALUMINIUM-ALLOY, ENVELOPE TYPE)

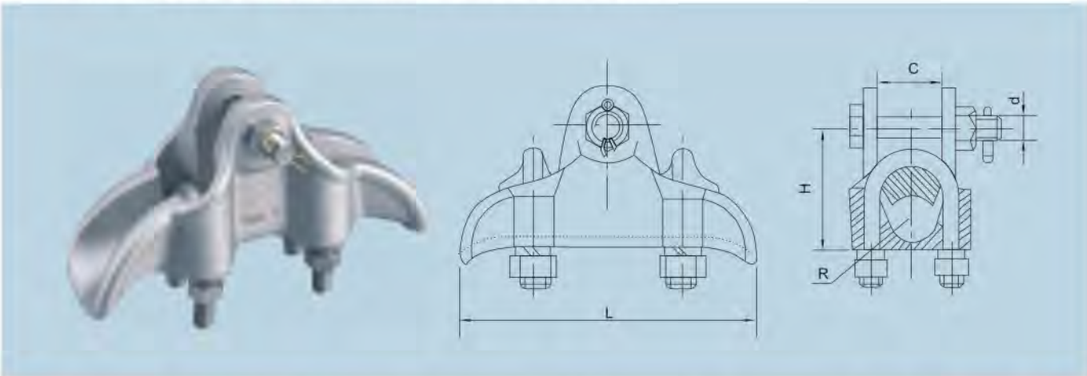

型号 Type	适用绞线直径范围(包括加包缠物) Suitable Conductor(with wraps)(mm)	主要尺寸 Dimnesions (mm)				破坏荷重不小于 Ultimate load not less than(kN)	重量 Weight(kg)
		L	H	R	C		
CGH-3	12.4~17.0	200	65	9.5	22	40	1.5
CGH-4	19.0~21.6	220	70	12	28	40	2.2
CGH-5	24.2~28.0	250	75	15	35	60	2.8

XGH悬垂线夹
SUSPENSION CLAMPS

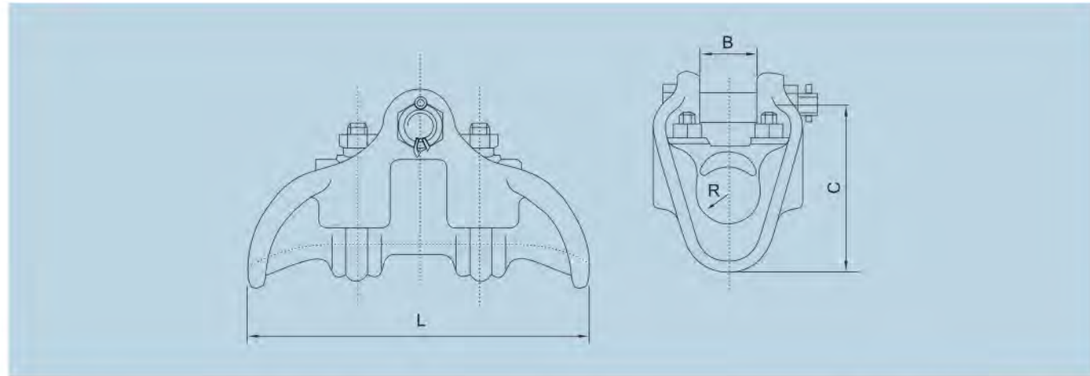

型号 Type	适用导线 Suitable Conductor	主要尺寸 Dimnesions (mm)				破坏荷重不小于 Ultimate load not less than(kN)	重量 Weight(kg)
		C	B	R	L		
XGH-8	LGKK-587	135	56	27	300	70	4.51
	LGKK-900						
	LGJQT-1400						

XBJ加强型悬垂线夹(提包式)
STRENGTHENED SUSPENSION CLAMPS (ENVELOPE TYPE)

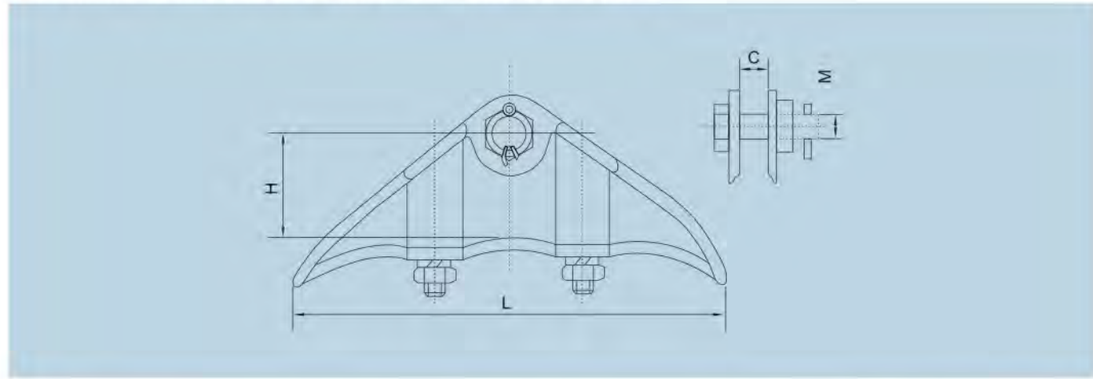

型号 Type	适用导线 Suitable Conductor	主要尺寸 Dimnesions (mm)				破坏荷重不小于 Ultimate load not less than(kN)	重量 Weight(kg)
		h	C	M	L		
XBJ-4	CJ-70	80	19	18	300	60	4.12

XGT改进型悬垂线夹(提包式)
SUSPENSION CLAMPS(ENVELOPE TYPE)

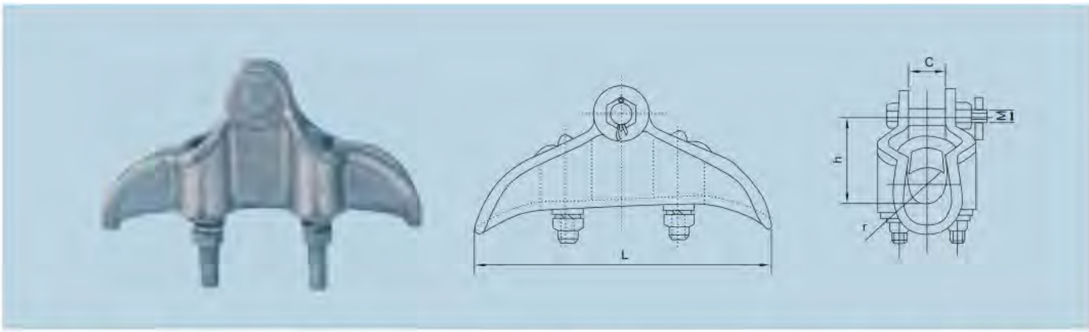

型号 Type	适用绞线直径范围(包括加包缠物) Suitable Conductor(with wraps)(mm)	主要尺寸 Dimnesions (mm)				破坏荷重不小于 Ultimate load not less than(kN)	重量 Weight(kg)
		h	c	M	L		
XGT-1	5.0~7.0	60	18	18	180	40	3.3
XGT-2	7.1~13.0	75	18	18	200	40	4.9
XGT-3	13.1~21.0	75	27	18	220	40	5.6
XGT-4	21.1~26.0	75	27	18	250	40	6.5
XGT-5	23.0~33.0	81	38	16	300	60	8.7
XGT-6	34.0~45.0	89	46	16	300	60	9.8

XCS悬垂线夹(双线夹垂直排列)
SUSPENSION CLAMPS FOR TWIN CONDUCTORS

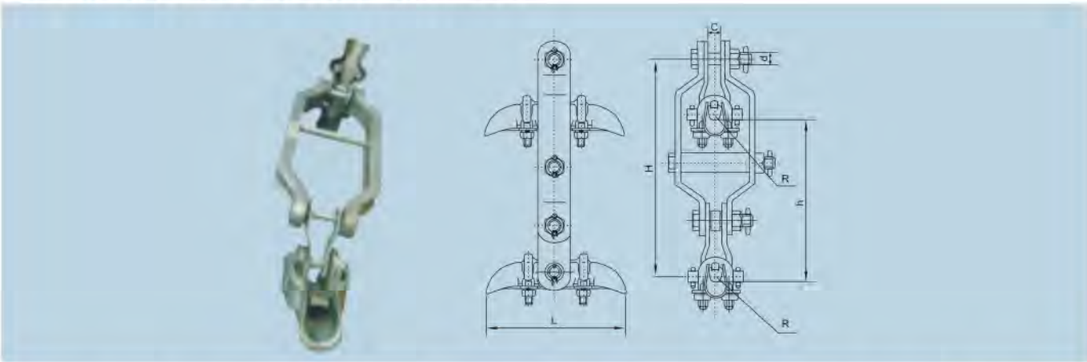

型号 Type	适用绞线直径范围(包括加包缠物) Suitable Conductor(with wraps)(mm)	主要尺寸 Dimnesions (mm)						破坏荷重不小于 Ultimate load not less than(kN)	重量 Weight(kg)
		d	C	H	h	L	R		
XCS-5	23. 0~33.0	18	42	490	400	300	17.0	100	14.6
XCS-6	34.0~45.0	18	42	490	400	300	23.0	100	15.0
XCS-4	21.0~26.0	18	20	490	400	250	13.5	70	9.3
XCS-6A	23.0~33.0	18	42	495	400	300	17	60	12.5

线夹本体和压板为可锻铸铁件，闭口销为不锈钢制件，其余为钢制件热镀锌。
The clamp body and keepers are malleablle iron, the closed pin in stainless steel work. The other parts are steel, all ferrous are hot-dip galvanized steel.

XFX悬垂线夹(上扛式)
SUSPENSION CLAMPS(CARRIED-UP TYPE)

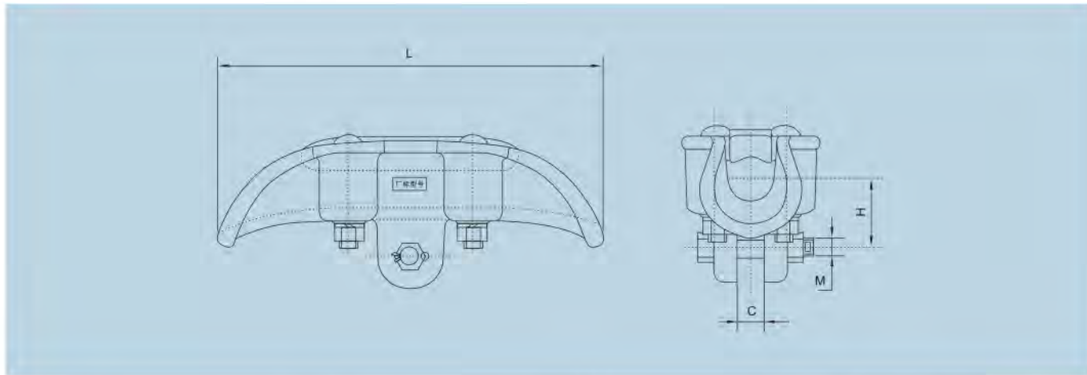

型号 Type	适用导线 Suitable Conductor	主要尺寸 Dimnesions (mm)				破坏荷重不小于 Ultimate load not less than(kN)	重量 Weight(kg)
		L	H	C	M		
XFK-8038	LGJ-720/50	330	60	24	16	80	3.6

XF悬垂线夹
SUSPENSION CLAMPS

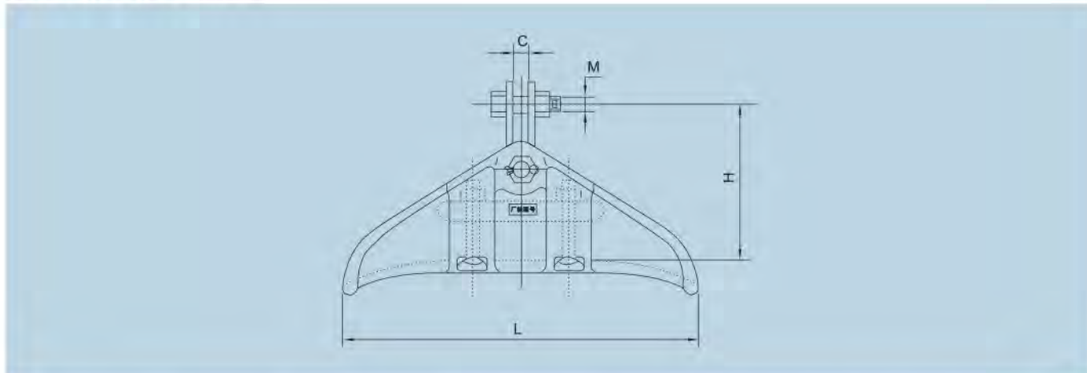

型号 Type	适用导线 Suitable Conductor	主要尺寸 Dimnesions (mm)				破坏荷重不小于 Ultimate load not less than(kN)	重量 Weight(kg)
		L	H	C	M		
XF-15054	LGJ-720/50	418	185	26	24	150	9.5

XT4四分裂悬垂线夹(跳线用)

SUSPENSION CLAMPS FOR QUAD-BUNDLE CONDUCTORS(FOR JUMRER CONFUCTOR)

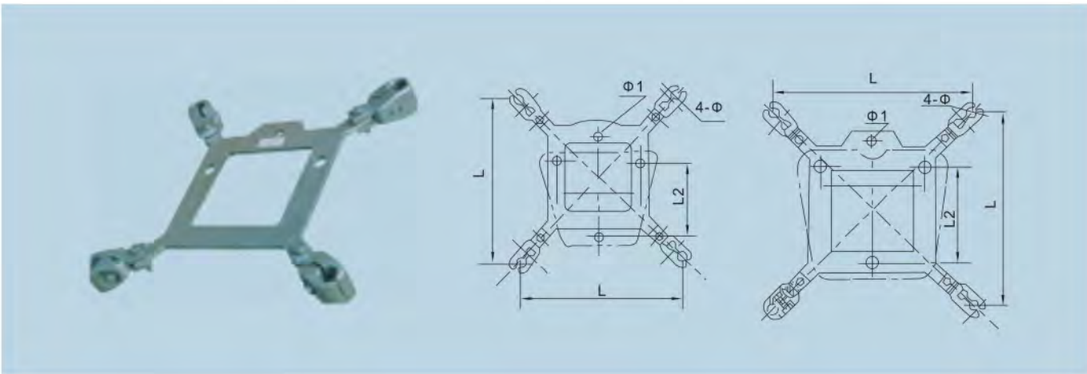

型号 Type	适用绞线直径范围(包括加包缠物) Suitable Conductor(with wraps)(mm)	主要尺寸 Dimnesions (mm)					重量 Weight (kg)
		L	L_1	L_2	Φ1	Φ	
XT_4-45300	20.8~24.0	450	240	220	18	26	6.6
XT_4-45300-1	20.8~24.0	450	240	220	18	26	6.6
XT_4-45400	24.0~28.0	450	240	220	18	26	6.6
XT_4-45400-1	24.0~28.0	450	240	220	18	26	6.6
XTJ-720	36.23	500	240	220	26	31	13.5

线路金具
CIROUIT FITTING

耐张线夹 STRAIN CLAMP

耐张线夹主要用于架空电力线路或变电站，固定导线和避雷线，并通过联结金具与耐张绝缘子相连，或将避雷线与杆塔相连。按结构和安装方法不同分为螺栓型，压缩型两大类，压缩型又分液压和爆压两种。

This kind of product is mainly used in standing electric power line or substation, stationary conduction line and lightning conductor, and also be used in jointing the strain insulator by join hardware or jointing the lightning conductor with the perch. They can be divided into two major varieties, which are bolt type and compression type according to the different structure and installation method. But the compression type is also divided to hydraulic type and detonation type.

NLL系列输电用螺栓型铝合金耐张线夹
NLL SERIES POWER DISTRIBUTION USES BOLTTYPE ALUMINIUM ALLOY STRAIN CLAMP

用途 Application

NLL系列输电用螺栓型铝合金耐张线夹适用于35kV及以下架空线路中，在耐张杆上固定铝铰线或钢芯铝铰线。

NLL series bolt type alumhium alloy strain clamp is applicable to 35kV and below aerial cirouits. To fix aluminum stranded oonduetor or steel core aluminum stranded conductor

外形及安装尺寸 Dimension drawings

型号 Type	使用导线直径范围(含铝绑带)mm Used conductor diameter range (binding band with A1)	主要尺寸 Dimnesions (mm)				U型螺丝 U type scres			标称破坏截荷 Nominal collapse load (kN)	参考重量 Reference weight (kg)
		L1	L2	R	C	M	个数	直径		
NLL-1	Φ5.6~14.5	140	130	7.5	18	16	2	M12	40	0.9
NLL-2	Φ8.2~17	212	180	8.5	21	16	3	M12	70	1.6
NLL-3	Φ8.2~20	295	250	10.0	24	16	4	M14	70	2.7
NLL-4	Φ13.6~25	324	255	12.5	30	18	4	M16	10	3.9
NLL-5	Φ16.0~32	400	320	16	36	22(24)	5	M16	120	5.6
NLL-6	Φ28.5~46.5	485	380	23.5	48	24	6	M18	120	9.1

适用于架空铝绞线、钢芯铝绞线输电线路。
Applicable for power transmission circuit of aerial Aluminium stranded wire and steel core Aluminium stranded wire.

NLD可锻铸铁耐张线夹
SUSPENSION CLAMPS

型号 Type	使用导线直径范围 Suitable conductor (mm)	主要尺寸 Dimnesions (mm)					破坏荷重不小于 Ultimate load not less than (kN)	重量 Weight (kg)
		d	C	L	l	R		
NLD-1	5.0~10.0	16	18	150	120	6.5	20	1.3
NLD-2	10.1~14.0	16	18	205	130	8.0	40	2.1
NLD-3	14.4~18.0	18	22	310	160	11.0	70	4.6
NLD-4	18.1~23.0	18	25	410	220	12.5	90	7.0

XY钢绞线用耐张线夹(压缩型)
STRAIN CLAMPS FOR STEEL WIRE(COMPRESSION TYPE)

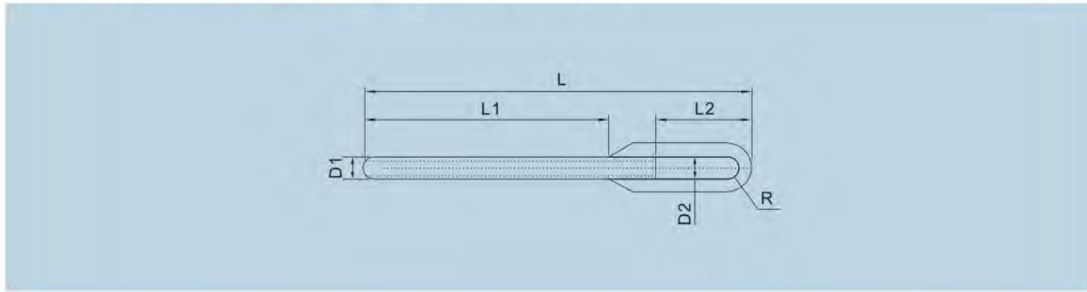

型号 Type	钢绞线外径 O.D of steel wire (mm)	主要尺寸 Dimnesions (mm)					握力 Grip strength(kN)	重量 Weight (kg)
		D1	D2	L1	L2	L		
NY-35G	7.8	16	16	115	50	205	45	0.6
NY-50G	9.0	18	16	130	55	230	60	0.7
NY-70G	11.0	22	18	155	110	315	88	1.3
NY-100G	13.0	26	20	185	130	365	12	1.7
NY-120G	14.0	28	22	195	70	320	143	2.0
NY-135G	15.0	30	22	215	80	365	164	2.3
NY-150G	16.0	32	24	230	90	390	187	2.8

热镀锌钢制件 Hot-dip galvanized steel.

NYG钢锚锻制耐张线夹(液压型)
STRAIN CLAMPS (HYDRAULIC COMPRESSION)

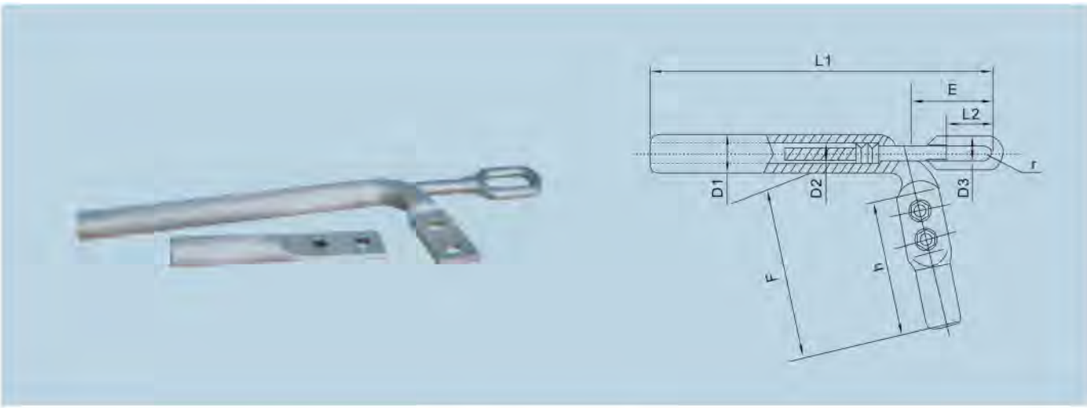

型号 Type	适用导线 Suitable conductor	主要尺寸 Dimnesions (mm)									握力 Grip strength(kN)	重量 Weight (kg)
		D1	D2	D3	L1	L2	r	h	E	F		
NYG-240/30	LGJ-240/30	36	16	18	500	55	10	240	110	295	72	2.91
NYG-240/40	LGJ-240/40	36	16	18	515	55	10	240	125	295	79	3.05
NYG-240/55	LGJ-240/55	36	20	18	535	55	11	250	115	305	97	3.22
NYG-300/15	LGJ-300/15	40	14	16	490	50	11	265	105	320	65	3.59
NYG-300/20	LGJ-300/20	40	14	18	510	55	11	265	115	320	72	3.58
NYG-300/25	LGJ-300/25	40	14	18	515	55	11	265	116	320	79	3.45
NYG-300/40	LGJ-300/40	40	16	18	535	55	11	265	116	320	88	3.52
NYG-300/50	LGJ-300/50	40	18	18	560	65	12	265	130	320	98	3.87
NYG-300/70	LGJ-300/70	42	20	20	600	70	12	265	140	320	122	4.48
NYG-400/20	LGJ-400/20	45	14	18	540	55	13	280	115	340	84	4.32
NYG-400/25	LGJ-400/25	45	14	18	550	55	13	280	115	340	91	4.32
NYG-400/35	LGJ-400/35	45	16	20	580	65	13	280	130	340	99	4.62
NYG-400/50	LGJ-400/50	45	20	20	590	65	13	280	130	340	117	4.70
NYG-400/65	LGJ-400/65	48	22	22	620	70	13	280	140	340	128	5.40
NYG-400/95	LGJ-400/85	48	26	26	670	80	13	280	150	340	163	7.03

线夹本体和引流夹线为铝制作，其余为热镀锌钢制件。
The body and lead flow clamp are aluminium, the other parts are hot-dip galvanized.

NY耐张线夹
STRAIN CLAMPS (HYDRAULIC COMPRESSION TYPE)

型号 Type	适用导线 Suitable condrctor	主要尺寸 Dimensions(mm)							握力(kN) Grip Strength
		D1	D2	D3	L1	L2	r	h	
NY-50/30	LGJ-50/30	32	16	16	330	60	8.5	180	41
NY-60/35	LGJ-60/35	32	16	16	450	60	8.5	180	46
NY-70/40	LGJ-70/40	32	16	16	450	50	8.5	180	55
NY-95/55	LGJ-95/55	34	22	18	406	50	11.0	210	74
NY-95/140	LGJ-95/140	45	30	24	605	80	15.0	245	163
NY-150/20	LGJ-150/20	30	14	16	510	55	8.0	285	44
NY-150/35	LGJ-150/35	32	16	16	475	55	9.0	210	61
NY-185/30	LGJ-185/30	32	16	16	460	55	9.0	295	62
NY-185/45	LGJ-185/45	34	18	16	495	60	10.0	240	76
NY-240/30	LGJ-240/30	36	16	18	455	55	10.0	225	72
NY-240/40	LGJ-240/40	36	16	18	469	55	10.0	225	78
NY-240/55	LGJ-240/55	36	20	18	481	55	11.0	225	97
NY-300/15	LGJ-300/15	40	14	16	441	50	11.0	265	65
NY-300/20	LGJ-300/20	40	14	18	465	55	11.0	265	72
NY-300/25	LGJ-300/25	40	14	18	465	55	11.0	265	78
NY-300/40	LGJ-300/40	40	16	18	487	55	11.0	265	88
NY-300/50	LGJ-300/50	40	18	18	510	65	12.0	265	98
NY-300/70	LGJ-300/70	42	22	20	545	70	13.0	265	122
NY-400/20	LGJ-400/20	45	14	18	486	55	13.0	280	84
NY-400/25	LGJ-400/25	45	14	18	496	55	13.0	280	91
NY-400/35	LGJ-400/35	45	16	20	524	65	13.0	280	99
NY-400/50	LGJ-400/50	45	20	20	537	65	13.0	280	117
NY-400/65	LGJ-400/65	48	22	22	538	70	13.0	280	123
NY-400/95	LGJ-400/95	48	26	26	631	80	1400	280	163
NY-500/35	LGJ-500/35	52	16	20	617	65	14.0	275	114
NY-500/45	LGJ-500/45	52	18	20	627	70	14.0	275	122
NY-500/65	LGJ-500/65	52	22	22	657	70	15.0	275	146
NY-630/45	LGJ-630/45	60	18	22	675	70	16.0	300	141
NY-630/55	LGJ-630/55	60	20	22	675	70	16.0	300	156
NY-630/80	LGJ-630/80	60	24	26	730	80	17.0	300	183
NY-800/55	LGJ-800/55	65	20	26	750	80	19.0	345	182
NY-800/70	LGJ-800/70	65	22	26	755	85	19.0	345	197
NY-800/100	LGJ-800/100	65	26	30	765	85	19.0	345	229

线夹本体和引流夹线为铝制作，其余为热镀锌钢制件。The body and lead flow clamp are alumiuium, the other parts are hot-dip galvanized

NB耐张线夹(爆压型)
STRAIN CLAMPS (HYDRAULIC COMPRESSION TYPE)

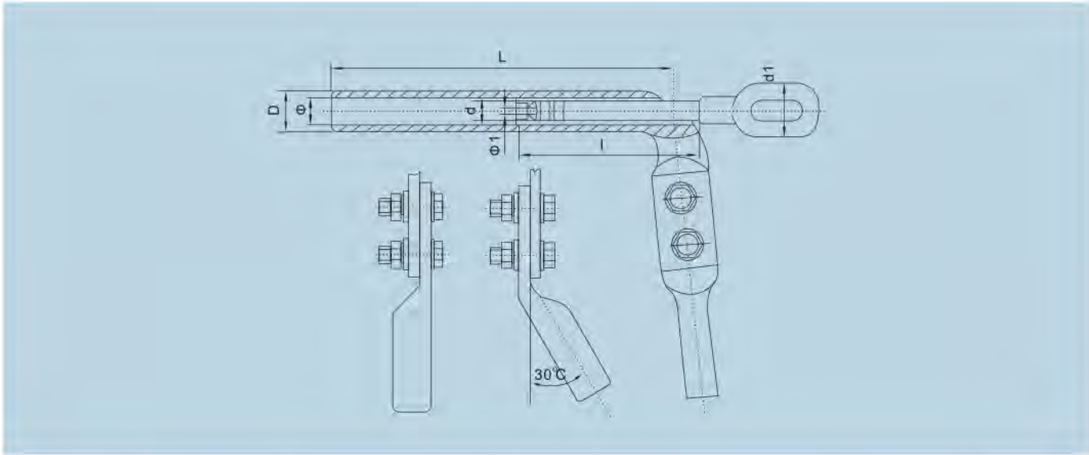

型号 Type	适用导线 Suitable conductor	主要尺寸 Dimnesions (mm)							握力 Grip strength(kN)	重量 Weight (kg)
		Φ	D	Φ1	d	l	L	d1		
NB-300/40A	LGJ-300/40	25.5	40	8.6	22	160	300	18	90	2.36
NB-300/40B										
NB-300/50A	LGJ-300/50	26.0	40	9.6	24	190	340	20	100	2.69
NB-300/50B										
NB-300/70A	LGJ-300/70	27.0	42	11.5	24	200	350	22	120	2.80
NB-300/70B										
NB-400/50A	LGJ-400/50	29.5	45	9.6	24	170	340	22	120	3.11
NB-400/50B										
NB-400/65A	LGJ-400/65	29.5	48	11.0	26	200	360	22	130	3.76
NB-400/65B										
NB-400/95A	LGJ-400/95	31.0	48	13.2	28	220	390	24	160	3.90
NB-400/95B										
NB-300/25	LGJ-300/25	25.5	40	7.3	22	160	300	16	79	2.5
NB-240/30A	LGJ-240/30	23	36	7.9	22	170	275	18	72	2.5
NB-400/35A	LGJ-400/35	28.5	45	8.2	24	170	285	20	99	3.74

线夹本体和引流夹线为铝制作，其余为热镀锌钢制作。
The body and lead flow clamp are aluminium, the other parts are hot-dip galvanized.

NY型耐张线夹(液压型)
STRAIN CLAMPS (HYDRAULIC COMPRESSION TYPE)

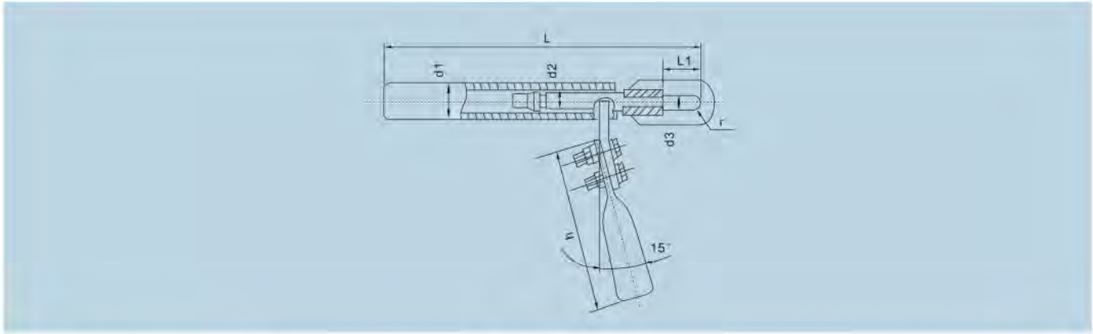

型号 Type	适用导线 Suitable conductor	主要尺寸 Dimnesions (mm)							握力 Grip strength(kN)	重量 Weight (kg)
		L	L1	d1	d2	d3	h	r		
NY-300Q	LGJQ-300	400	50	40	22	16	265	11	80	3.0
NY-400Q	LGJQ-400	450	60	45	24	18	280	12	103	3.8
NY-500Q	LGJQ-500	480	70	50	30	26	245	15	129	4.4
NY-600Q	LGJQ-600	510	75	55	33	30	290	16.5	151	5.5
NY-700Q	LGJQ-700	575	80	60	36	32	290		180	6.6

线夹本体和跳线夹线为铝制作，其余为热镀锌钢制作。
The body is aluminium clamp, the other parts are hot-dip galvanized steel.

NY型铝包钢芯铝绞线用耐张线夹(液压型)
STRAIN CLAMPS ALUMINIUM URAPPING STEELIRON ALUMINIUM (HYDRAULIC COMPRESSION TYPE)

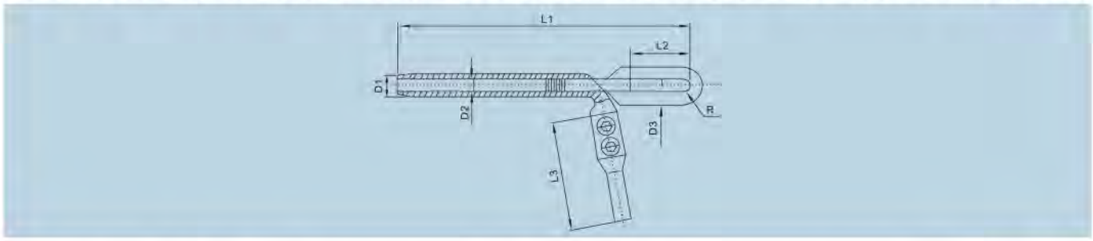

型号 Type	适用导线范围(mm^2) Suitable section of conductor	主要尺寸 Dimnesions (mm)							握力 Grip strength (kN)	重量 Weight (kg)
		D1	D2	D3	L1	L2	L3	R		
NY-70/40BG	ACSR/AS-70/40	34	16	16	480	50	180	8.5	57.8	2.4
NY-80/47BG	ACSR/AS-80/47	36	18	16	485	70	230	10.0	64.6	2.6
NY-95/55BG	ACSR/AS-95/55	36	20	18	486	61	230	11.0	74.0	2.9
NY-185/30BG	ACSR/AS-185/30	36	16	16	550	55	220	9.0	62.09	2.9
NY-240/40BG	ACSR/AS-240/40	38	18	18	595	65	240	12.0	81.6	3.3
NY-300/25BG	ACSR/AS-300/25	42	14	18	560	55	265	11.0	74.4	3.6
NY-300/40BG	ACSR/AS-300/40	42	18	18	615	70	265	13.0	90.0	3.8
NY-300/50BG	ACSR/AS-300/50	42	18	8	620	70	265	13.0	101.0	4.1
NY-300/70BG	ACSR/AS-300/70	42	22	20	640	70	260	13.0	117.8	4.4
NY-400/35BG	ACSR/AS-400/35	48	18	20	635	65	280	13.0	99.0	5.2
NY-400/50BG	ACSR/AS-400/50	48	20	20	645	65	280	13.0	117.0	5.2

NY型铝包钢芯铝绞线用耐张线夹(液压型)

STRAIN CLAMPS FOR ALUMINIUM URAPPING STEELIRON ALUMINIUM(HYDRAULIC COMPRESSION TYPE)

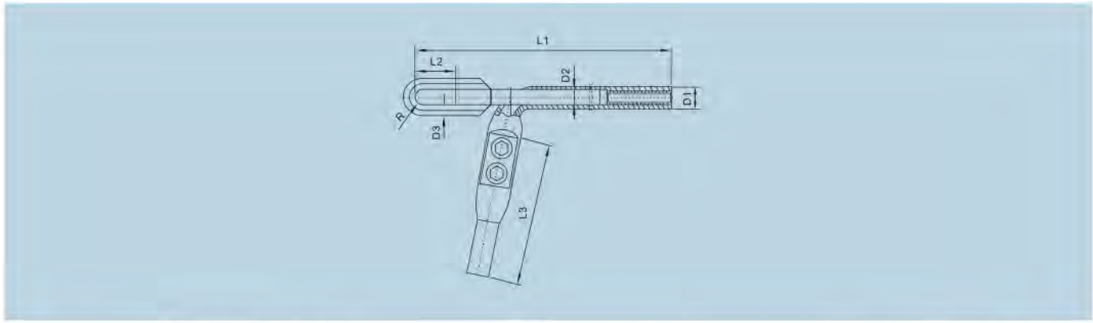

型号 Type	适用导线范围(mm²) Suitable section of conductor	主要尺寸 Dimnesions (mm)							握力 Grip strength (kN)	重量 Weight (kg)
		D1	D2	D3	L1	L2	L3	R		
NY-50BG	LB20J-50	32	18	16	275	64	195	9	55.8	1.7
NY-70BG	LB27J-70	32	20	16	380	50	185	10	65.8	1.7
NY-80BG	LB20J-80	36	24	18	417	67	185	12	85.8	2.5
NY-95BG	LB40J-95	34	24	16	400	60	200	10	56.0	2.5
NY-120BG	LB27J-120	36	26	20	375	70	210	13	112.0	3.0
NY-150BG	LB40J-150	42	20	20	530	75	265	13	86.0	3.8
NY-150.1BG	LB20J-150	45	32	30	560	90	280	16	167.0	7.3
NY-240BG	LB27J-240	50	36	30	620	110	280	18	221.3	7.8

线夹本体、铝衬管和引流夹线为铝制作，其余为热镀锌钢制作。
Clamp body, aluminium pipe and flow clamp are made of aluminum, others are hot-dip galvanized steel.

NY型耐热铝合金绞线用耐张线夹(液压型)

STAIN CLAMP FOR HEAT-PROOF ALUMINUM ALLOY WIRE

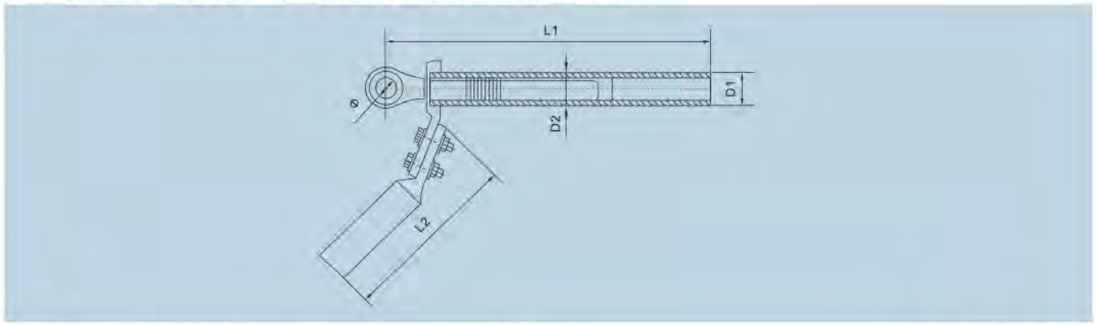

型号 Type	适用导线范围(mm²) Suitable section of conductor	主要尺寸 Dimnesions (mm)					握力 Grip strength (kN)	重量 Weight (kg)
		D1	D2	Φ	L1	L2		
NY-530N	KTACSR/EST-530	70	37	45	950	420	467	17.2
NY-720N	KTACSR/EST-720	76	42	45	1022	410	600	20.0

线夹本体和引流夹线为铝制作，其余为热镀锌钢制作。
Clamp bodyand flow clamp are made of aluminum, others are made of tinned steel.

NY型耐热铝合金绞线用耐张线夹(液压型)

STAIN CLAMPS FOR HEAT-PROOF ALUMINUM ALLOY WIRE

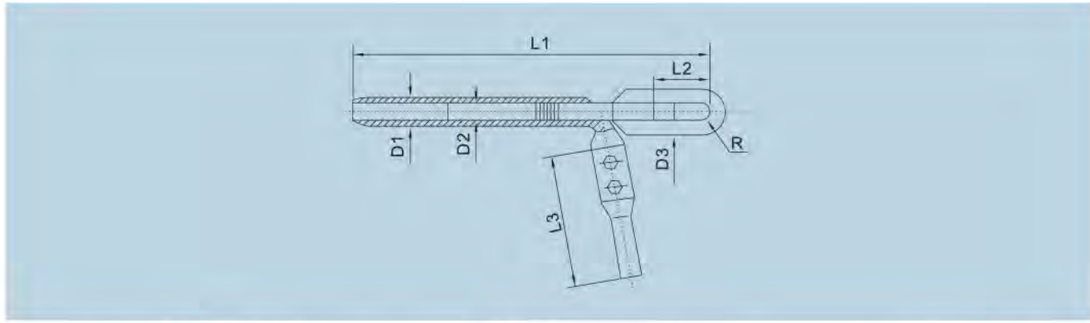

型号 Type	适用导线范围(mm²) Suitable section of conductor	主要尺寸 Dimnesions (mm)							握力 Grip strength (kN)	重量 Weight (kg)
		D1	D2	D3	R	L1	L2	L3		
NY-185/30N	NRLH$^{58}_{60}$GJ-185/30	36	16	16	10	545	55	265	63	4.2
NY-240/30N	NRLH$^{58}_{60}$GJ-240/30	45	18	18	10	545	55	285	68	4.4
NY-400/50N	NRLH$^{58}_{60}$GJ-400/50	55	20	20	13.5	605	65	315	102	7.6

线夹本体和引流夹线为铝制作，其余为热镀锌钢制作。
Clamp bodyand flow clamp are made of aluminum, others are made of tinned steel.

NY型钢芯铝合金绞线用耐张线夹(液压型)

STAIN CLAMPS FOR STEEL CORE ALUMINUM ALLOY WIRE

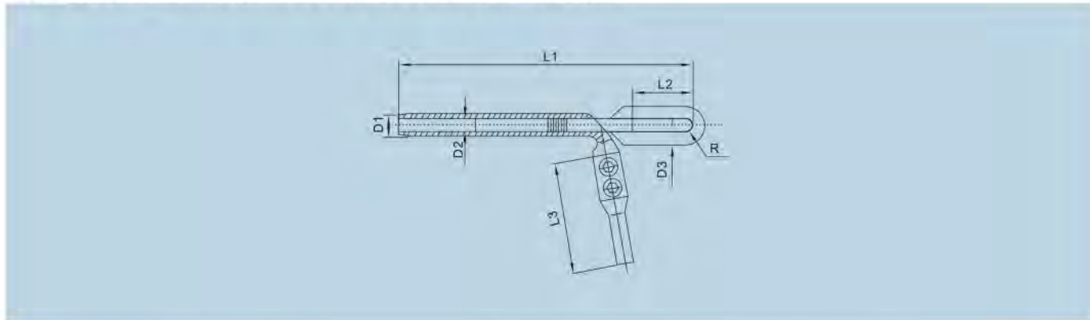

型号 Type	适用导线范围(mm²) Suitable section of conductor	主要尺寸 Dimnesions (mm)							握力 Grip strength (kN)	重量 Weight (kg)
		D1	D2	D3	R	L1	L2	L3		
NY-120/25H	AACSR-120/2	36	16	16	10.0	480	60	280	61	3.2
NY-185/45HG2	AACSR-185/4	42	18	20	11.5	505	70	265	96	3.5
NY-240/40HG1	LH8GJ-240/40	45	16	20	12.0	750	70	280	109	4.5
NY-240/55HJ	LH4GJT-240/55	45	20	22	13.0	740	70	280	126	5.2
NY-300/70H	LH4GJT-300/70	50	22	22	16.0	745	116	265	160	6.5
NY-400/95HT	LH8GJT-400/95	55	26	30	22.0	850	125	280	215	10.0

线夹本体和引流夹线为铝制作，其余为热镀锌钢制作。
Clamp bodyand flow clamp are made of aluminum, others are made of tinned steel.

线路金具
CIROUIT FITTING

联结金具 LINK FITTING (HARDWARE)

联结金具主要用于将悬式绝缘子组装成串，并将一串或数串绝缘子串连接、悬挂在杆塔横担上。悬垂线夹和耐张线夹与绝缘子串的连接，拉线金具与杆塔的连接，也都是用联结金具。根据是用条件，分为两大类：专用联结金具，是直接用来连接绝缘子的，因此，连接部位的结构和尺寸与绝缘子相同；通用联结金具，适用于各种情况的连接，并以荷重划分等线，荷重相同的金具具有互换性。

联结金具技术标准执行有关的国家标准和行业标准。

Join hardware is mainly applicable for assembling the suspension insulator to-fing, and it is also used in connecting one or several strings insulator and then suspending on the pole arm of perch. The join hardware is also used in the connection between suspension clamp and dead end clamp, the connection between stay wire and perch. According to the conditions of using, it carl. be divided into two major kinds: one is the special join hardware, which is directly used in connecting the insulator, SO, the structure and dimension of connection part should be the same to the insulator; the other is the universal join hardware, which is applicable for connection under all kinds of conditions, and its level is divided according to its load, the hardwares are interchan-geability if they are the same load.

The technical standard of join hardware is comply with the national standard and professional stmldard concemed.

Q、QP型球头挂环
Q、QP TYPE BALL-EYES

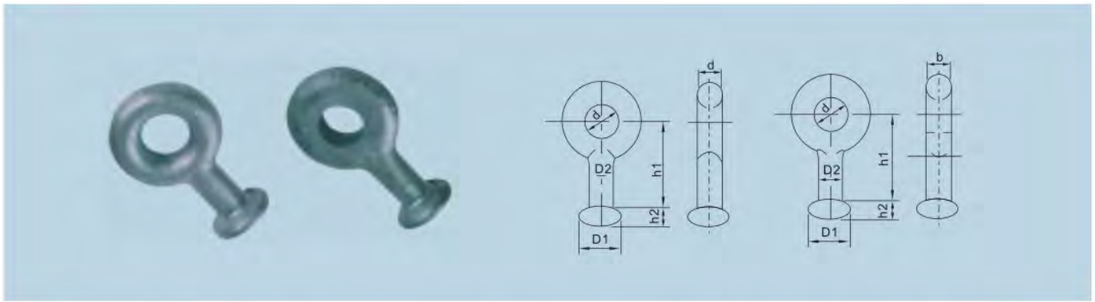

型号 Type	适用导线范围(mm) Suitable section of conductor	主要尺寸 Dimnesions (mm)						破坏荷重 Failure load (kN)	重量 Weight (kg)
		D_1	D_2	d	b	h_1	h_2		
Q-7	XP-7	33.3	17	22	16	50	13.4	70	0.3
QP-7	XP-7 X-4.5	33.3	17	20	16	50	13.4	70	0.3
QP-10	XP-10	33.3	17	20	16	50	13.4	100	0.3
QP-16	XP-16	41.0	21	26	20	60	19.5	160	0.5
QP-20	XP-20	49.0	25	30	24	80	21.0	200	1.0
QP-21D	XP-21	41.0	21	29	24	70	19.5	210	1.0
QP-30	XP-30	49.0	25	39	30	80	21.0	300	1.1

钢制件，热镀锌。
Hot-dip galvanized steel.

QH型球头挂环
QH TYPE BALL-EYES

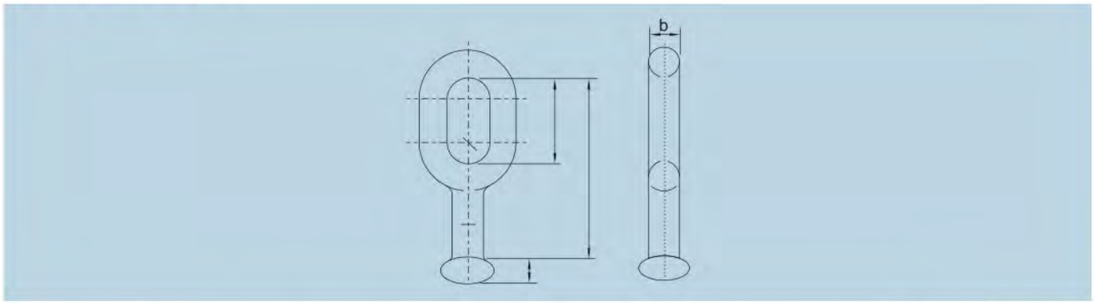

型号 Type	适用绝缘子 Suitable insulation	主要尺寸 Dimnesions (mm)						破坏荷重 Failure load (kN)	重量 Weight (kg)
		h_1	h_2	h_3	R	D	b		
QH-7	XP-7	13.4	114	57	11	17	16	70	0.6

钢制件，热镀锌。
Hot-dip galvanized steel.

Q型球头挂环(环孔平行型)
Q TYPE BALL-ELYE (COLLAR PORE PARALLEL TYPE)

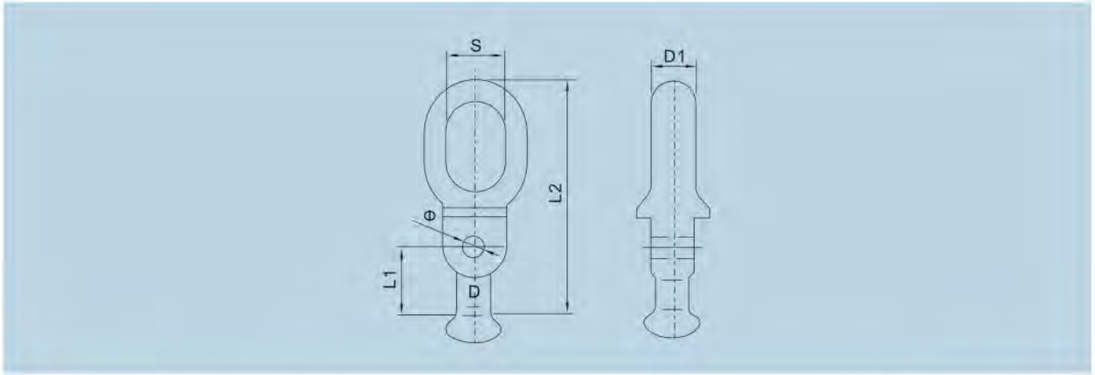

型号 Type	适用绝缘子 Suitable insulation	主要尺寸 Dimnesions (mm)						破坏荷重 Failure load (kN)	重量 Weight (kg)
		L_1	L_2	S	D	D_1	Φ		
Q-7M	XP-7	60	130	18	16	16	14	70	1.0
Q-12M	XP-12	70	145	22	18	18	14	120	1.3

钢制件，热镀锌。
Hot-dip galvanized steel.

Q型球头挂环(环孔垂直型)
Q TYPE BALL-ELYE (COLLAR PORE VERTICAL TYPE)

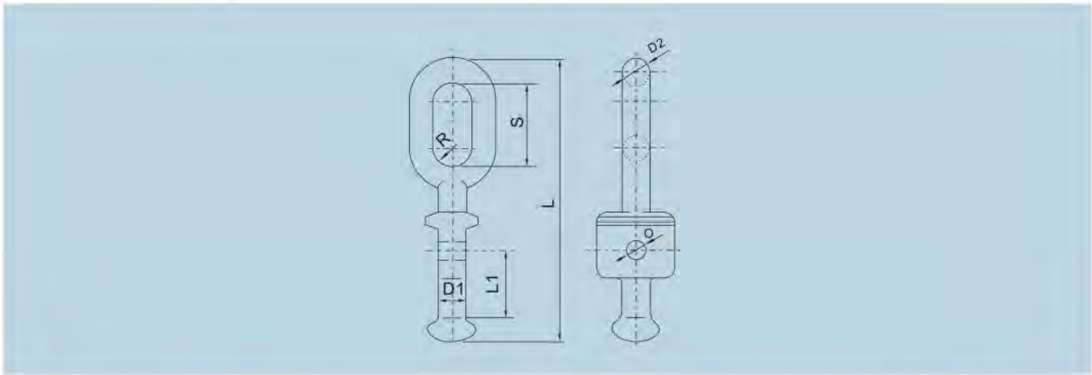

型号 Type	适用绝缘子 Suitable insulation	主要尺寸 Dimnesions (mm)							破坏荷重 Failure load (kN)	重量 Weight (kg)
		L	L_1	D_1	D_2	S	R	Φ		
Q-7M	XP-7	170	42	17	16	50	12.5	14	70	1.2
Q-12M	XP-12	185	48	17	20	56	15.0	14	120	1.5

钢制件，热镀锌。
Hot-dip galvanized steel.

Q型球头挂板
Q TYPE BALL-CLEVIES

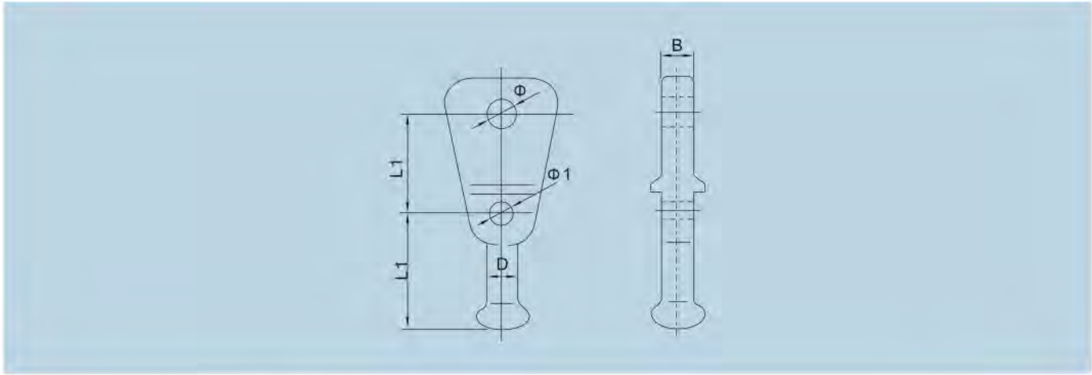

型号 Type	适用绝缘子 Suitable insulation	主要尺寸 Dimnesions (mm)						破坏荷重 Failure load (kN)	重量 Weight (kg)
		L_1	L_2	D	Φ	$Φ_1$	B		
Q-7P	XP-7	70	60	17	20	14	16	70	1.1
Q-12P	XP-12	70	65	17	24	14	18	120	1.3

钢制件，热镀锌。
Hot-dip galvanized steel.

Q型球头
Q-BALL

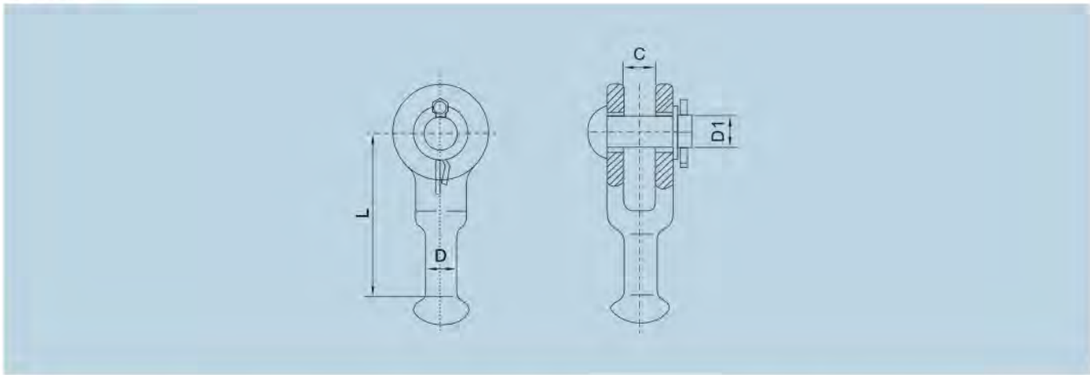

型号 Type	适用绝缘子 Suitable insulation	主要尺寸 Dimnesions (mm)				破坏荷重 Failure load (kN)	重量 Weight (kg)
		C	D_2	D	L		
Q-7U	XP-7	18.0	16	17	89	70	0.9
Q-12U	XP-12	22.0	22	17	95	120	1.0
Q-16U	XP-16	22.5	24	20	80	160	1.0

钢制件，热镀锌。
Hot-dip galvanized steel.

QG型球头钩
QG TYPE BALL-HOOK

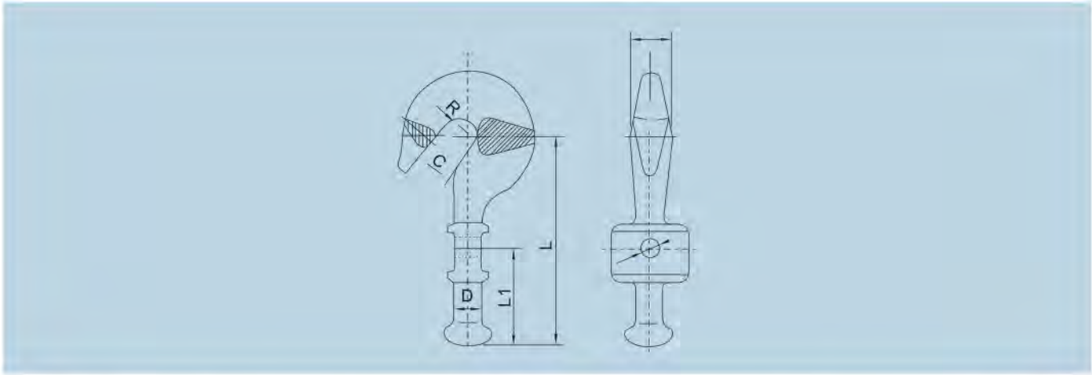

型号 Type	适用绝缘子 Suitable insulation	主要尺寸 Dimnesions (mm)						破坏荷重 Failure load(kg)	重量 Weight (kg)
		L	L_1	b	C	D	R		
QG-7	XP-7	154	55	32	22	17	11	70	1.5

钢制作，热镀锌。 Hot-dip galvanized steel

W型球头挂环
W TYPE BALL-CLEVIES

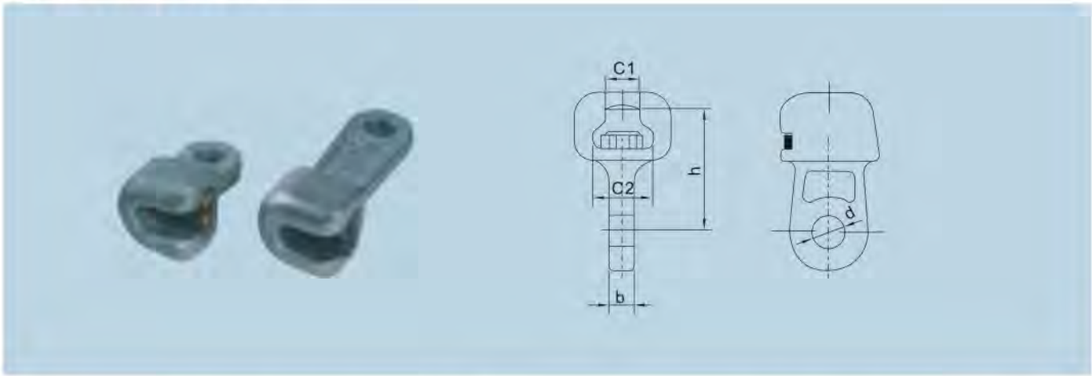

型号 Type	适用绝缘子 Suitable insulation	主要尺寸 Dimnesions (mm)					破坏荷重 Failure load(kg)	重量 Weight (kg)
		C_1	C_2	h	d	b		
W-7A	XP-7 XP-4.5	19.2	34.5	70	20	16	70	0.8
W-7B	XP-7 XP-4.5	19.2	34.5	115	20	16	70	0.9
W_1-10	XP-10	19.2	34.5	85	20	18	100	1.0

碗头挂板为可锻铁件，热镀锌。弹簧为青铜件或不锈钢件。
Socket clevies is forgeable iron, hor galvanizing. Spring catch bronze or stainless steel.

球头挂板(带孔W型)
BALL-CLEVIES (W TYPE WITH EYE)

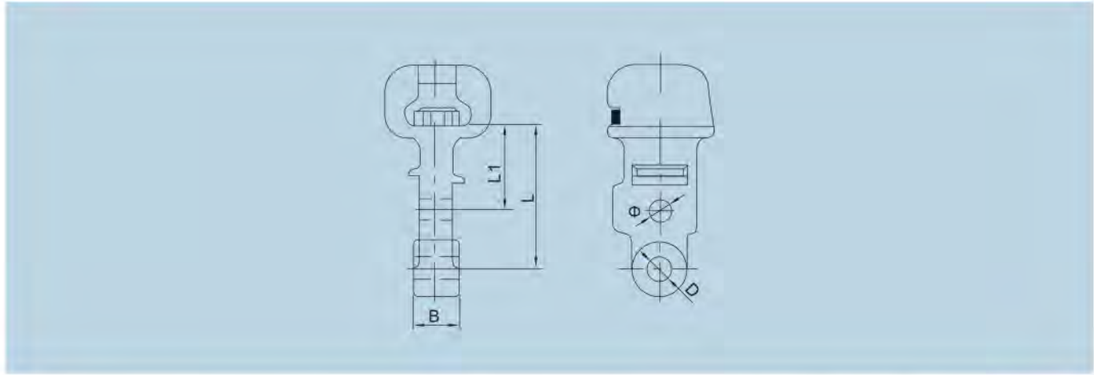

型号 Type	适用绝缘子 Suitable insulation	主要尺寸 Dimnesions (mm)					破坏荷重 Failure load(kg)	重量 Weight (kg)
		L	L1	B	D	Φ		
W_1-7K	XP-7 XP-4.5	120	70	20	18	14	70	1.0
W_1-12K	XP-12	120	70	20	24	14	120	1.3

W1-7K碗头挂板为可锻铁件，W1-12K为铸钢件，热镀锌。弹簧销为青铜件或不锈钢件。
W1-7K socket clevies is forgeable iron, W1-12K is cast steel, hot galvanizing. Spring catch bronze or stainless steel.

球头挂板(带孔W型)
BALL-CLEVIES (W TYPE WITH EYE)

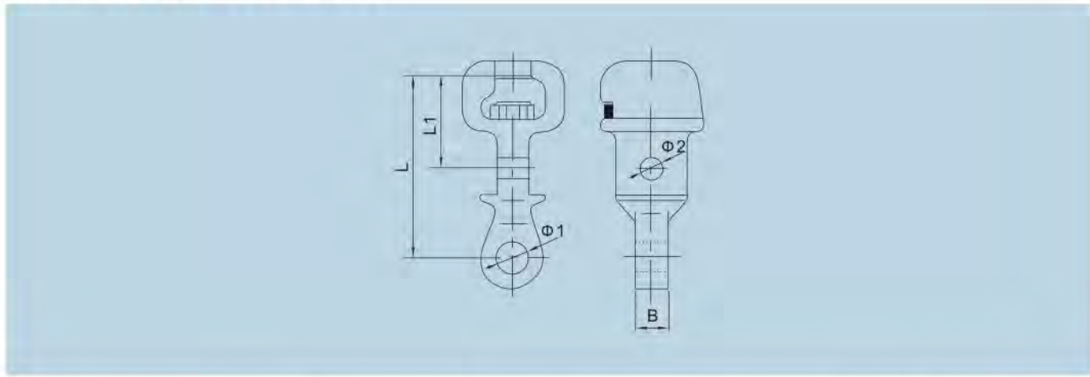

型号 Type	适用绝缘子 Suitable insulation	主要尺寸 Dimnesions (mm)					破坏荷重 Failure load(kg)	重量 Weight (kg)
		L	L_1	$Φ_1$	$Φ_2$	B		
W_1-7R	XP-7 XP-4.5	120	70	20	14	20	70	1.0
W_1-12R	XP-12	120	70	22	14	22	120	1.3

W_1-7K碗头挂板为可锻铁件，W_1-12K为铸钢件，热镀锌。弹簧销为青铜件或不锈钢件。
W_1-7K socket clevies is forgeable iron, W_1-12K is cast steel, hot galvanizing. Spring catch bronze or stainless steel.

WS型碗头挂板
WS TYPE SOCKET-CLEVIES EYES

型号 Type	适用绝缘子 Suitable insulation	主要尺寸 Dimensions(mm)					破坏荷重 Failure load (kN)	重量 Weight (kg)
		C	C_1	C_2	M	h		
WS-7	XP-7	18	19.2	34.5	16	70	70	1.0
WS-10	XP-10	20	19.2	34.5	18	85	100	1.2
WS-16	XP-16	26	23.0	42.5	24	95	160	2.6
WS-20	XP-20	30	27.5	51.0	27	100	200	4.3
WS-21R	XP-21	30	23.0	42.5	27	100	210	4.5
WS-30	XP-30	36	27.5	51.0	36	110	300	5.7

碗头挂板WS-7和WS-10为可锻铸铁件，其余为铸钢件，弹簧销为青铜件或不锈钢件，闭口销为不锈钢件，其余为刚制件，所有钢铁制作热镀锌。
Socket clevies WS-7 and WS-10 is cast iron,others are cast steel，spring catch is bronze or stainless steel,closed bolt is stainless steel,others are steel,all irons are hot-dip galvanized steel.

球头挂环(加长WS型)
BALL-CLEVIES (W TYPE FOR LENGTHENING)

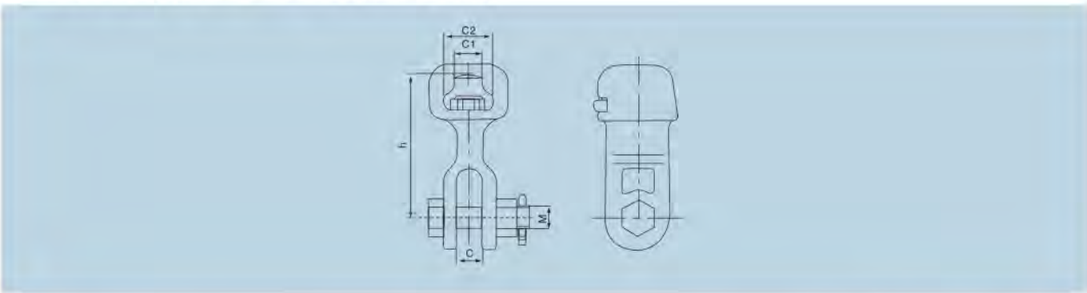

型号 Type	适用绝缘子 Suitable insulation	主要尺寸 Dimensions(mm)					破坏荷重 Failure load (kN)	重量 Weight (kg)
		C	C_1	C_2	M	h		
WS-21L	XP-20	24	27.5	51	22	150	210	4.7
WS-30L	XP-30	30	27.5	51	27	150	300	5.2

弹簧销为青铜件或不锈钢件，闭口销为不锈钢件，其余为钢制件，所有热镀锌。
Spring catch is bronze or stainless steel，closed bolt is stainless steel,all irons are hot-dip galvanized steel.

U型挂环
U TYPE SHACKLES

型号 Type	主要尺寸 Dimensions (mm)					破坏荷重 Failure load (kN)	重量 Weight (kg)
	C	M	D	h	r		
U-7	20	16	16	60	22	70	0.5
U-7B	20	16	16	80	22	70	0.6
U-10	22	18	18	70	24	100	0.6
U-10B	22	18	18	85	23	100	0.7
U-12	24	22	20	80	30	120	1.0
U-16	26	24	22	90	32	160	1.5
U-16T	28	24	22	90	32	160	1.5
U-20	30	27	24	100	36	200	2.3
U-20B	30	27	24	115	36	200	2.4
U-25	34	30	26	110	40	250	2.8
U-30	38	36	30	130	46	300	3.7
U-50	44	42	36	150	55	500	7.0

闭口销为不锈钢件，其余为热镀锌钢制件。
Closed catch is stainless steel, others are hot-dip galvanized steel.

U型挂环
U TYPE SHACKLES

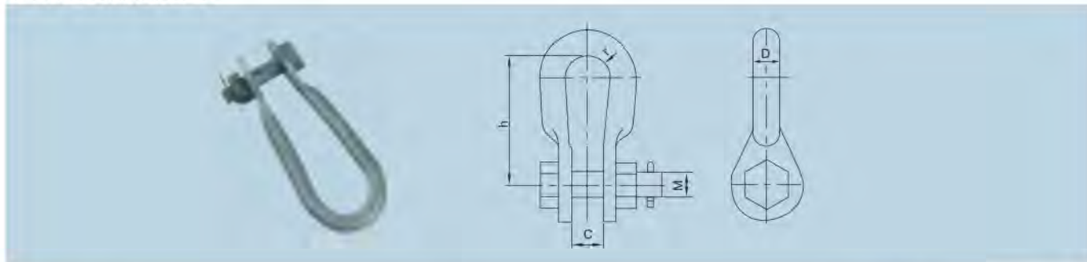

型号 Type	主要尺寸 Dimensions (mm)					破坏荷重 Failure load (kN)	重量 Weight (kg)
	C	M	D	h	r		
U-20-1	22	27	24	100	15	200	2.3
U-30r	34	36	30	170	20	300	4.5
U-50-1	38	42	36	150	22	500	4.9
U-50-2	30	42	36	150	22	500	4.8
U-60T	40	42	42	230	28	600	11.5
U-30	50	48	42	230	28	600	16.0
U-70	40	42	36	170	28	700	9.5
U-100	44	48	42	200	28	1000	14.5

闭口销为不锈钢件，其余为热镀锌钢制件。
Closed catch is stainless steel, others are hot-dip galvanized steel.

加强型U型挂环
STRENGTH TYPE SHACKLES

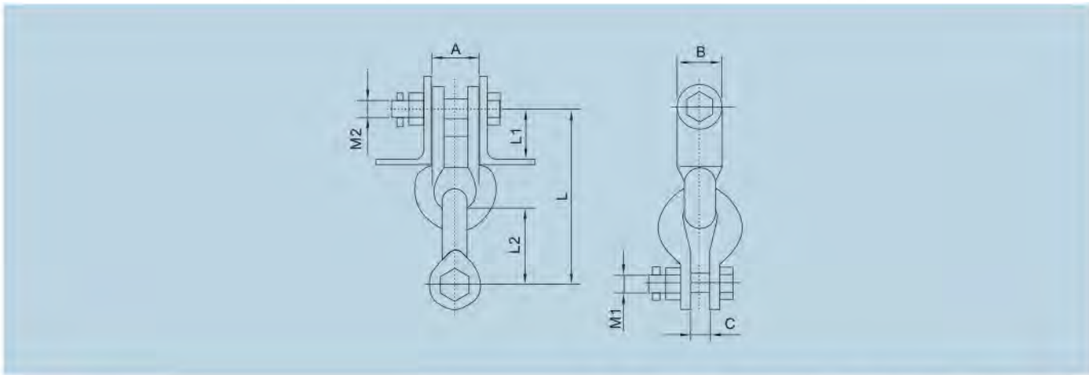

型号 Type	主要尺寸 Dimensions (mm)								破坏荷重 Failure load (kN)	重量 Weight (kg)
	A	B	C	M_1	M_2	L	L_1	L_2		
U-16J	60	60	30	24	24	195	75	87	160	5.7
U-20J	60	60	30	27	27	230	75	110	200	5.7
U-40J	70	108	44	42	42	323	125	120	400	13.9

闭口销为不锈钢件，其余为热镀锌钢制件。
Closed catch is stainless steel, others are hot-dip galvanized steel.

ZH型挂环
ZH TYPE SHACKLES

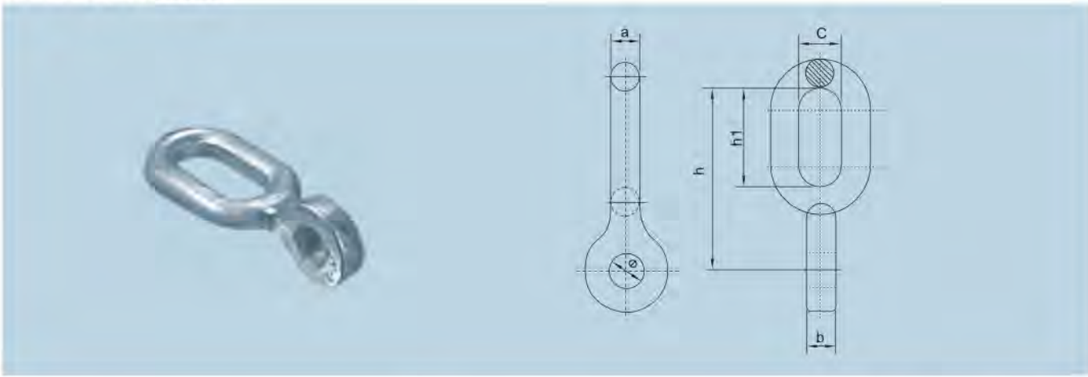

型号 Type	主要尺寸 Dimensions (mm)						破坏荷重 Failure load (kN)	重量 Weight (kg)
	a	b	c	Φ	h1	h		
ZH-7	16	16	24	24	57	95	70	0.5

热镀锌钢制件。
Hot-dip galvanized steel.

PH型延长环(环体焊接)
PH TYPE CHAIN LINKS(ANNULUS WELDING)

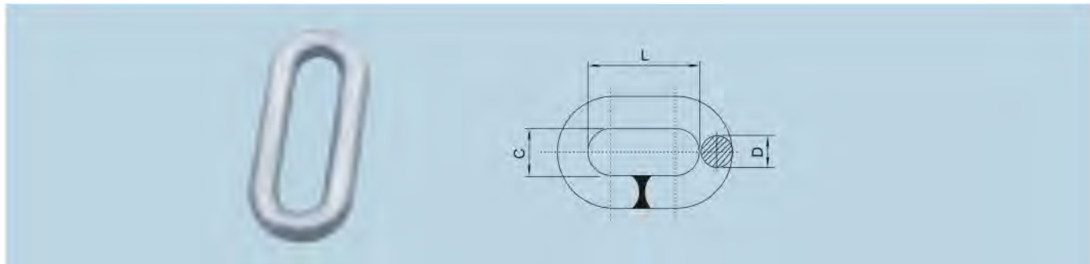

型号 Type	主要尺寸 Dimensions (mm)			破坏荷重 Failure load (kN)	重量 Weight (kg)
	C	D	L		
PH-7	22	16	80	70	0.4
PH-10	22	18	100	100	0.6
PH-10L	22	18	350	100	1.7
PH-12	24	20	120	120	0.9
PH-16	26	22	140	160	1.2
PH-20	30	24	160	200	1.9
PH-25	34	26	160	250	2.0
PH-30	38	30	180	300	3.0
PH-50	44	36	200	600	11.5

热镀锌钢制件。
Hot-dip galvanized steel.

PH型延长环(环体整锻)
PH TYPE CHAIN LINKS(ANNULUS MONOBLOC ROGING)

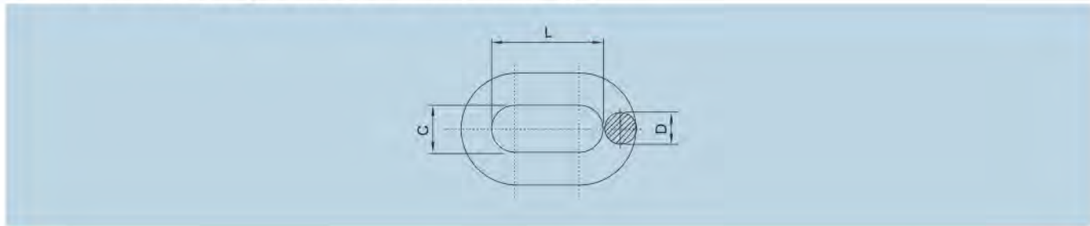

型号 Type	主要尺寸 Dimensions (mm)			破坏荷重 Failure load (kN)	重量 Weight (kg)
	C	D	L		
PH-7.1	20	16	80	70	0.4
PH-10.1	22	18	100	100	0.6
PH-12.1	24	20	120	120	0.9
PH-16.1	26	22	140	160	1.5
PH-20.1	30	24	160	200	1.6
PH-25.1	34	26	160	250	2.0
PH-30.1	38	30	180	300	3.0

热镀锌钢制件。
Hot-dip galvanized steel.

YL型拉杆
YL TYPE ANCHOR STRUT

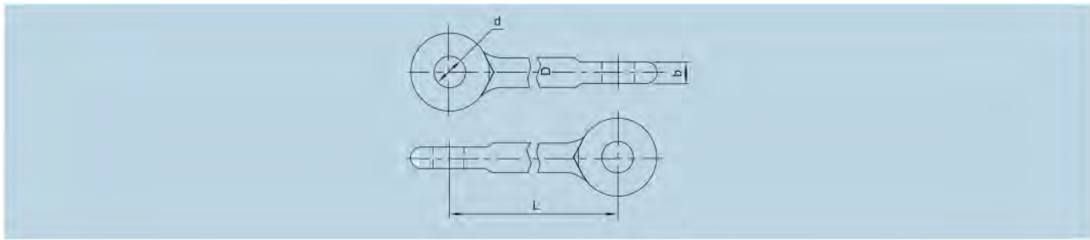

型号 Type	主要尺寸 Dimensions (mm)				破坏荷重 Failure load (kN)	重量 Weight (kg)
	D	d	b	L		
YL-1012	18	20	16	120	100	0.8
YL-1040	18	20	16	400	100	1.1
YL-1050	18	20	16	500	100	1.4
YL-1069	18	20	16	690	100	1.9
YL-10100	18	20	16	1000	100	2.2
YL-1243	22	24	18	430	120	1.6
YL-1643	22	26	18	430	160	1.6
YL-2043	24	30	20	430	200	3.0

热镀锌钢制件。
Hot-dip galvanized steel.

YLP型拉杆
YLP TYPE ANCHOR STRUT

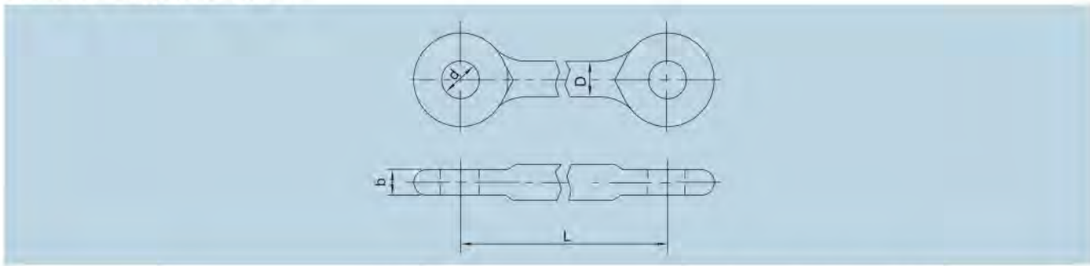

型号 Type	主要尺寸 Dimensions (mm)				破坏荷重 Failure load (kN)	重量 Weight (kg)
	D	d	b	L		
YL-16260	24	26	20	260	160	1.6
YL-16850	24	26	20	850	160	3.7
YL-16910	24	26	20	910	160	3.9
YL-16970	24	26	20	970	160	4.1
YL-16990	24	26	20	990	160	4.3
YL-25855	30	33	30	855	250	6.2
YL-25915	30	33	30	915	250	6.6
YL-25935	30	33	30	935	250	6.7

热镀锌钢制件。
Hot-dip galvanized steel.

Z型挂板
Z TYPE CLEVIES

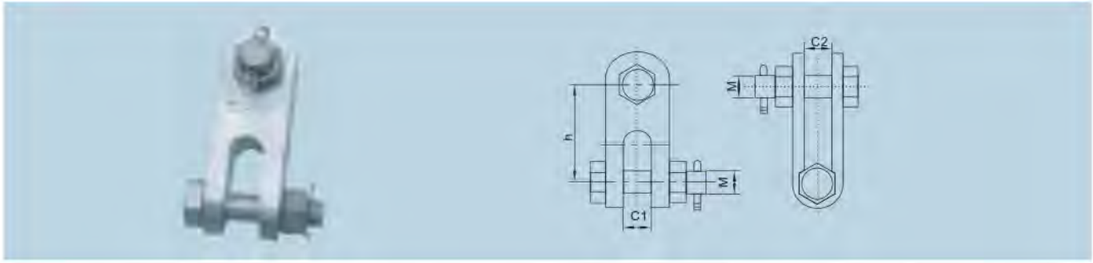

型号 Type	主要尺寸 Dimensions (mm)				破坏荷重 Failure load (kN)	重量 Weight (kg)
	C1	C2	M	h		
Z-7	18	18	16	60	70	0.6
Z-7B	20	20	16	80	70	0.7
Z-10	20	20	18	70	100	0.8
Z-10B	20	20	18	80	100	0.9
Z-12	24	24	22	80	120	1.3
Z-16	26	26	24	90	160	2.5
Z-16C1	26	26	24	140	160	3.2
Z-16C2	26	26	24	170	160	3.8
Z-20	30	30	27	120	160	3.5
Z-25	34	34	30	110	250	3.8

热镀锌钢制件。
Hot-dip galvanized steel.

ZS型挂板
ZS TYPE CLEVIES

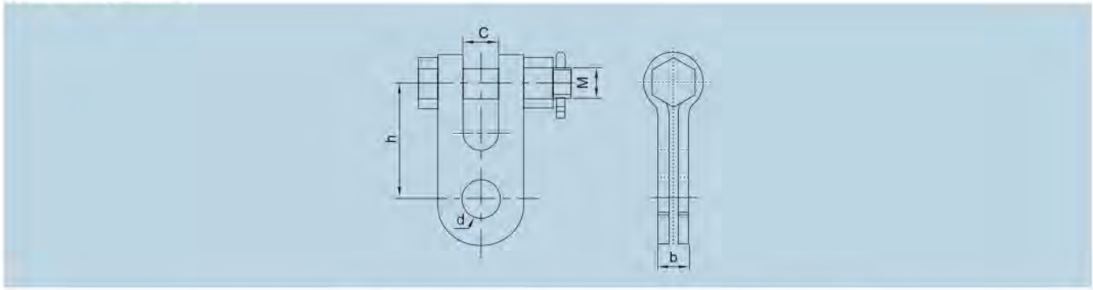

型号 Type	主要尺寸 Dimensions (mm)					破坏荷重 Failure load (kN)	重量 Weight (kg)
	C	b	M	d	h		
ZS-7	18	16	16	20	60	70	0.6
ZS-10	20	18	18	20	70	100	0.9
ZS-16	26	26	24	26	90	160	1.9
ZS-30	38	34	36	39	150	300	5.4
ZS-665	20	22	16	20	65	70	0.7

闭口销为不锈钢件，其余为热镀锌钢制件。
Closed catch is stainless steel, others are hot-dip galvanized steel.

PS型挂板
PS TYPE CLEVIES

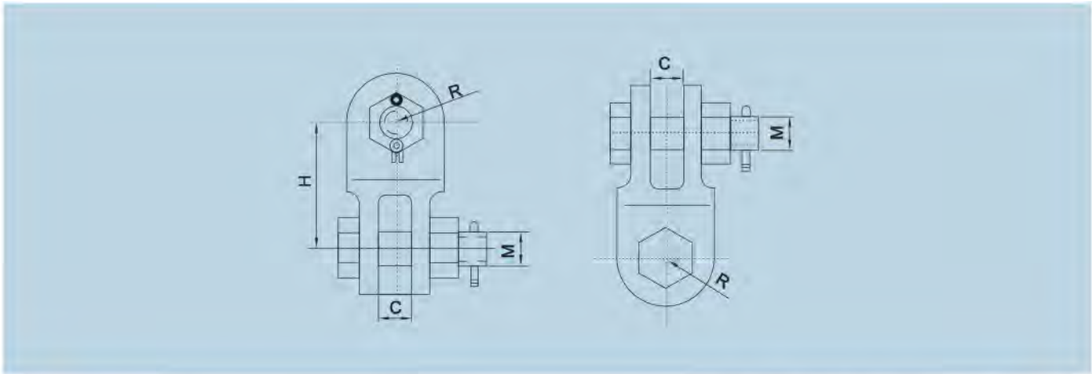

型号 Type	主要尺寸 Dimensions (mm)				破坏荷重 Failure load (kN)	重量 Weight (kg)
	C	R	M	H		
Z1-25	34	40	30	100	250	2.8
Z-30	38	46	36	135	300	5.4
Z-40	42	50	36	150	400	8.6
Z-60	50	62	48	180	600	19.6

闭口销为不锈钢件，其余为热镀锌钢制件。
Closed catch is stainless steel, others are hot-dip galvanized steel.

PS型挂板
PS TYPE CLEVIES

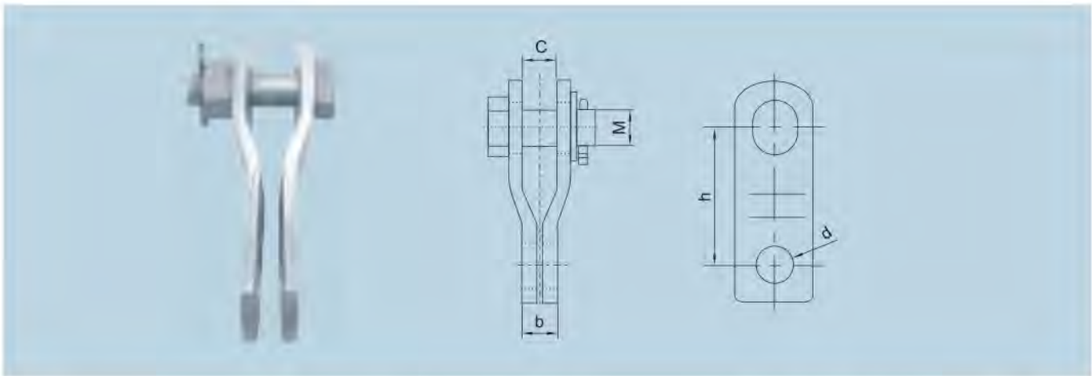

型号 Type	主要尺寸 Dimensions (mm)					破坏荷重 Failure load (kN)	重量 Weight (kg)
	C	b	M	d	h		
PS-7	18	16	16	20	90	36	0.6
PS-30	38	32	36	39	150	294	5.9

闭口销为不锈钢件，其余为热镀锌钢制件。
Closed catch is stainless steel, others are hot-dip galvanized steel.

P型挂板
P TYPE CLEVIES

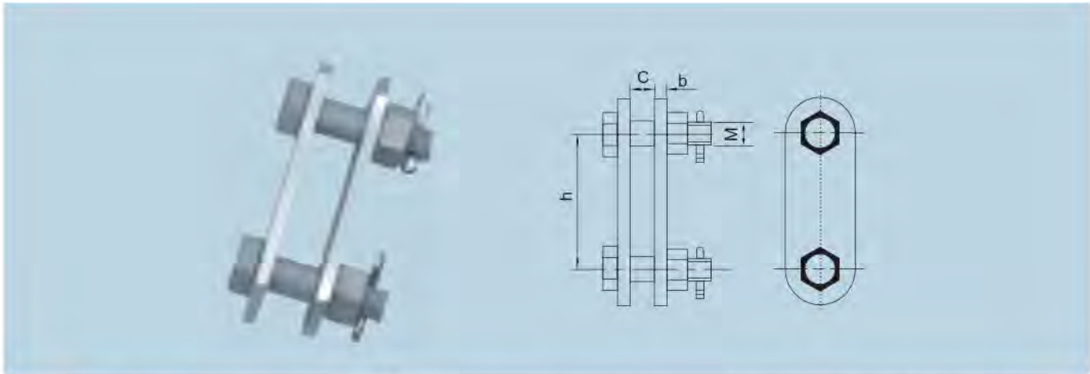

型号 Type	主要尺寸 Dimensions (mm)				破坏荷重 Failure load (kN)	重量 Weight (kg)
	b	C	M	h		
P-7	6	18	16	60	70	0.6
P-10	8	20	18	70	100	0.9
P-12	10	24	22	80	120	1.5
P-16	12	26	24	90	160	2.4
P-20	14	30	27	120	200	4.1
P-2018	14	30	27	180	200	5.1
P-2024	14	30	27	240	200	6.0
P-2030	14	30	27	300	200	6.9
P-2036	14	30	27	360	200	7.8
P-2042	14	30	27	420	200	8.7
P-2048	14	30	27	480	200	9.7
P-2054	14	30	27	540	200	10.6
P-30	16	38	36	120	200	4.7
P-3018	16	38	36	180	300	6.1
P-3024	16	38	36	240	300	7.3
P-3030	16	38	36	300	300	8.4
P-3036	16	38	36	360	300	9.1
P-3042	16	38	36	420	300	10.9
P-3048	16	38	36	480	300	12.1
P-3054	16	38	36	540	300	13.3
P-5012	18	44	42	120	500	10.7
P-5018	18	44	42	180	500	11.2
P-5020	18	44	42	200	500	11.8
P-5024	18	44	42	240	500	12.2
P-5026	18	44	42	260	500	12.6
P-5030	18	44	42	300	500	13.0
P-5036	18	44	42	360	500	13.5
P-5042	18	44	42	420	500	14.0
P-5048	18	44	42	480	500	14.6
P-5054	18	44	42	540	500	15.2
P-60135	22	50	48	135	600	16.6

闭口销为不锈钢件，其余为热镀锌钢制件。
Closed catch is stainless steel, others are hot-dip galvanized steel.

UB型挂板
UB TYPE CLEVIES

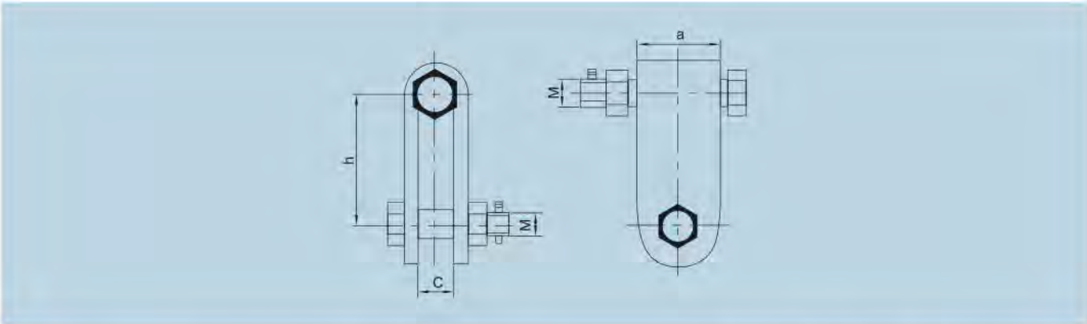

型号 Type	主要尺寸 Dimensions (mm)				破坏荷重 Failure load (kN)	重量 Weight (kg)
	C	M	h	a		
UB-7	18	16	70	45	70	0.8
UB-10	20	18	80	45	100	1.1
UB-12	24	22	100	60	120	2.8
UB-16	26	24	100	60	160	2.9
UB-16G	24	20	90	48	160	2.9
UB-20	30	27	120	72	200	3.6

闭口销为不锈钢件，其余为热镀锌钢制件。
Closed catch is stainless steel, others are hot-dip galvanized steel.

US型挂板
US TYPE CLEVIES

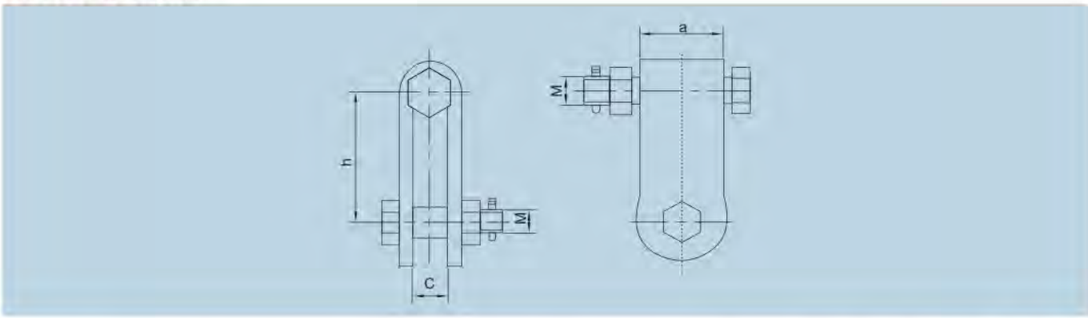

型号 Type	主要尺寸 Dimensions (mm)				破坏荷重 Failure load (kN)	重量 Weight (kg)
	C	M	h	a		
US-6-1	20	16	65	30	60	0.8
US-9.1	36	18	75	40	90	0.8
US-20T	30	27	120	60	200	2.5
US-30T	36	36	150	60	300	3.7

闭口销为不锈钢件，其余为热镀锌钢制件。
Closed catch is stainless steel, others are hot-dip galvanized steel.

V.VD型挂板
V.VD TYPE CLEVIES

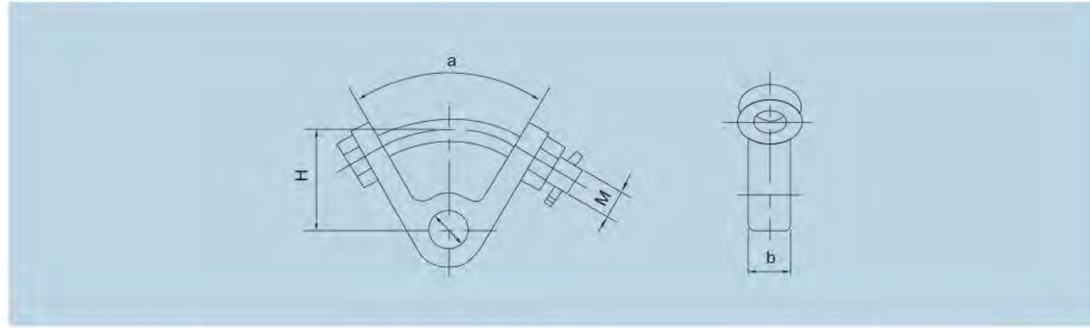

型号 Type	主要尺寸 Dimensions (mm)					破坏荷重 Failure load (kN)	重量 Weight (kg)
	d	M	b	H	α		
V-7	18	20	40	75	60°	70	1.8
VD-7	18	20	28	75	60°	70	1.4

闭口销为不锈钢件，其余为热镀锌钢制件。
Closed catch is stainless steel, others are hot-dip galvanized steel.

NPT型联塔联板
NPT TYPE JOINT YOKE PLATE

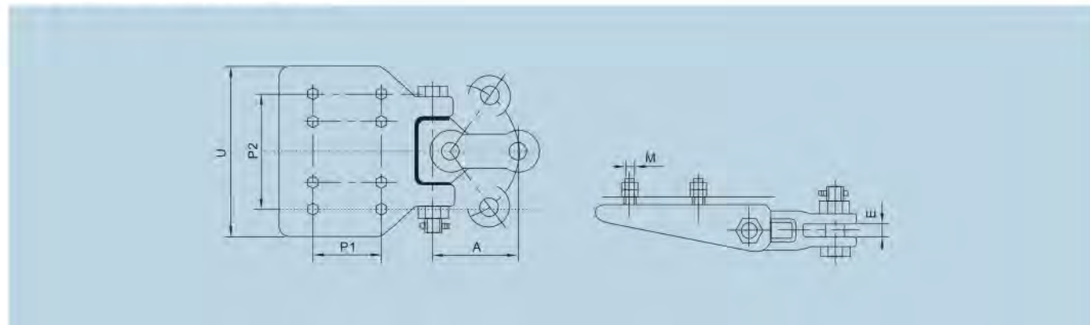

型号 Type	主要尺寸 Dimensions (mm)						破坏荷重 Failure load (kN)	重量 Weight (kg)
	U	P_1	P_2	A	E	M		
NPT-7	240	100	175	132	18	20	70	11
NPT-10	275	110	210	158	18	20	100	15
NPT-12	275	110	210	158	18	20	120	15
NPT-16	300	120	230	185	22	22	160	18
NPT-21	300	120	230	187	34	24	210	20
NPT-33	360	70	270	182	34	24	330	22

闭口销为不锈钢件，其余为热镀锌钢制件。
Closed catch is stainless steel, others are hot-dip galvanized steel.

NPT型联塔联板
NPT TYPE JOINT YOKE PLATE

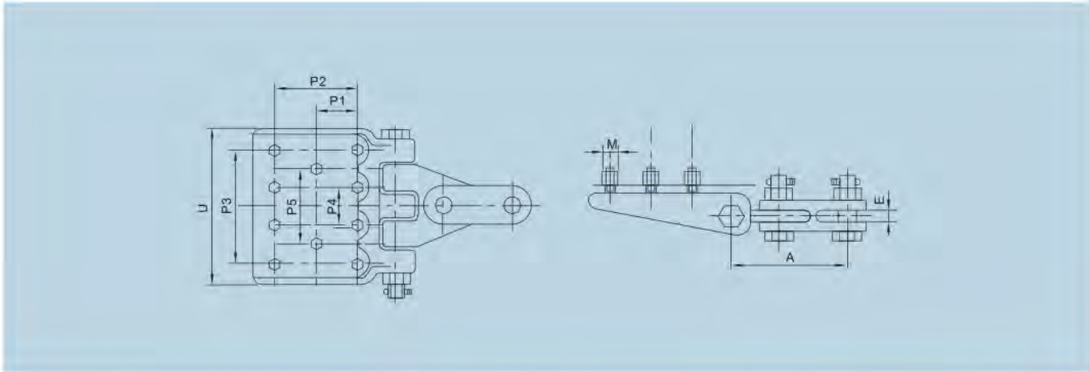

型号 Type	主要尺寸 Dimensions (mm)									破坏荷重 Failure load (kN)	重量 Weight (kg)
	U	P_1	P_2	P_3	P_4	P_5	A	E	M		
NPT-42	350	81	162	270	90	180	225	34	24	420	25
NPT-60	350	81	162	270	90	180	225	34	24	600	25

闭口销为不锈钢件，其余为热镀锌钢制件。
Closed catch is stainless steel, others are hot-dip galvanized steel.

NPTS型联塔联板
NPTS TYPE JOINT YOKE PLATE

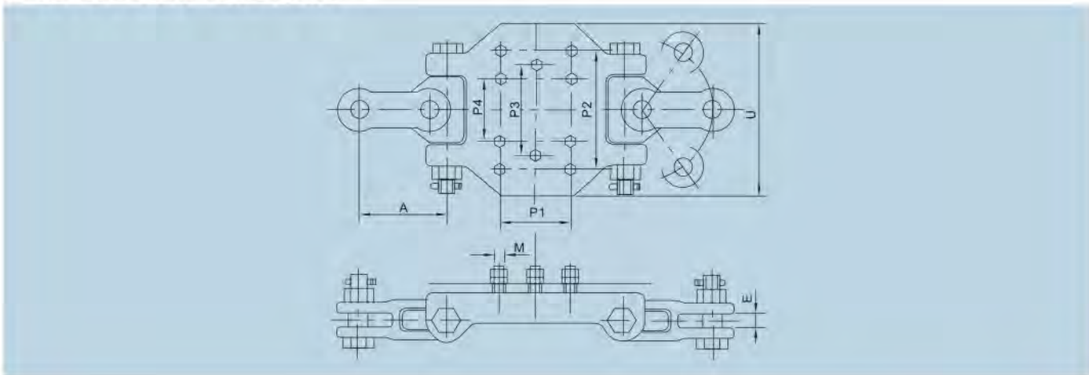

型号 Type	主要尺寸 Dimensions (mm)								破坏荷重 Failure load (kN)	重量 Weight (kg)
	U	P_1	P_2	P_3	P_4	A	E	M		
NPTS-33	320	140	240	160	80	192	34	24	330	40

闭口销为不锈钢件，其余为热镀锌钢制件。
Closed catch is stainless steel, others are hot-dip galvanized steel.

NPTS型联搭联板
NPTS TYPE JOINT YOKE PLATE

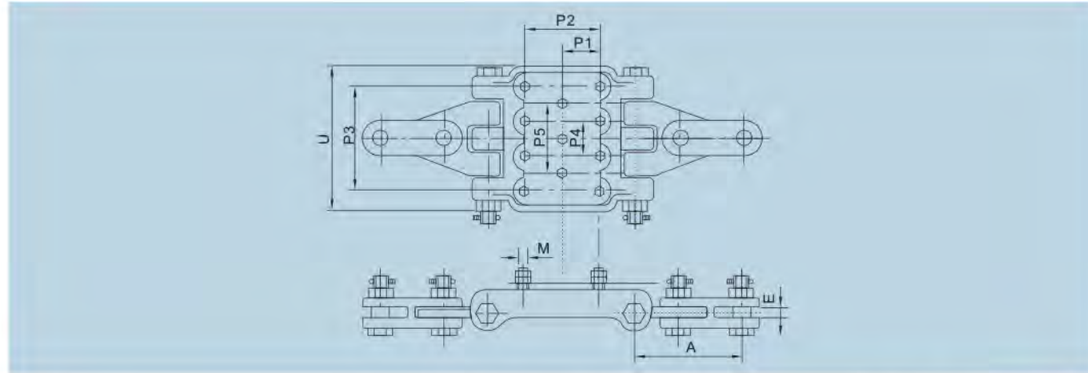

型号 Type	主要尺寸 Dimensions (mm)									破坏荷重 Failure load (kN)	重量 Weight (kg)
	U	P_1	P_2	P_3	P_4	P_5	A	E	M		
NPTS-42	350	81	162	270	90	180	225	34	24	420	45

闭口销为不锈钢件，其余为热镀锌钢制件。
Closed catch is stainless steel, others are hot-dip galvanized steel.

UB型联塔挂板
UB TYPE JOINT YOKE PLATE

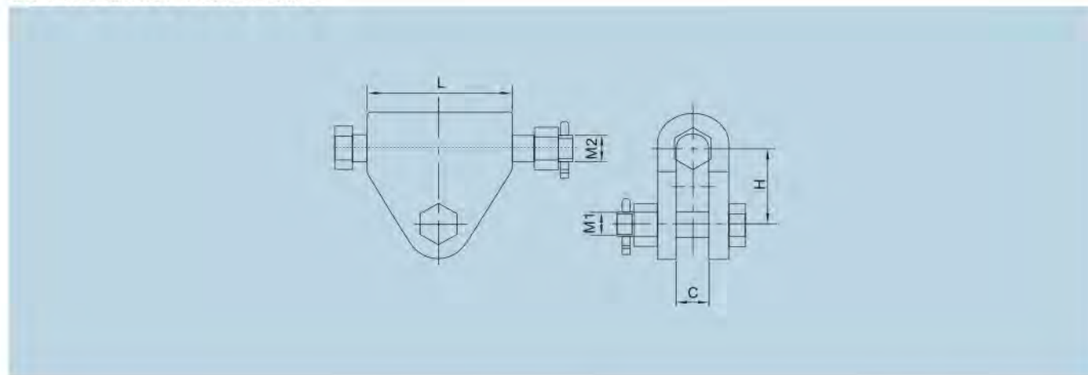

型号 Type	主要尺寸 Dimensions (mm)					破坏荷重 Failure load (kN)	重量 Weight (kg)
	C	L	M_1	M_2	H		
UB-25T	24	140	22	22	55	250	4.5

闭口销为不锈钢件，其余为热镀锌钢制件。
Closed catch is stainless steel, others are hot-dip galvanized steel.

LT、EB型联塔挂板
LT、EB TYPE JOINT CLEVIES

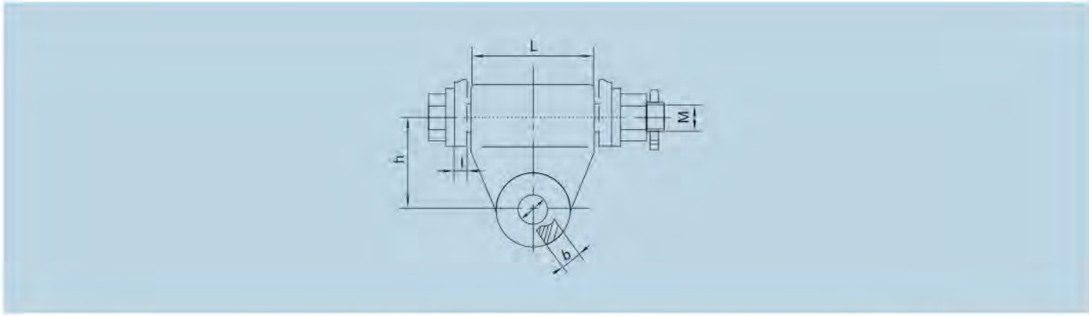

型号 Type	主要尺寸 Dimensions (mm)						破坏荷重 Failure load (kN)	重量 Weight (kg)
	b	Φ	h	M	L	l		
LT-16	18	26	100	24	80	20	160	3.5
LT-30	32	39	100	36	80	25	300	6.8
EB-50D	34	39	125	36	116	25	500	13.0
EB-70	38	45	125	42	136	26	700	14.4
EB-70A	38	45	150	64	195	30	700	29.9
EB-70B	42	51	150	64	195	30	700	29.7
EB-70C	38	45	125	42	116	28	700	13.3

闭口销为不锈钢件，其余为热镀锌钢制件。
Closed catch is stainless steel, others are hot-dip galvanized steel.

QY型牵引板
QY DRAWING PLATE

型号 Type	主要尺寸 Dimensions (mm)					破坏荷重 Failure load (kN)	重量 Weight (kg)
	L	L1	b	d	h		
QY-7	100	38	16	18	22	70	0.8
QY-10	120	42	16	20	25	100	1.0
QY-12	150	52	16	24	30	120	1.5
QY-16	180	55	18	26	35	160	2.1
QY-20	200	75	26	30	45	200	4.0
QY-30	240	92	32	39	57	300	7.3
QY-50	260	100	38	45	70	500	15.4
QY-60	260	114	42	51	80	600	16.0

闭口销为不锈钢件，其余为热镀锌钢制件。
Closed catch is stainless steel, others are hot-dip galvanized steel.

DB型调整板
DB TYPE ADJUSTING PLATE

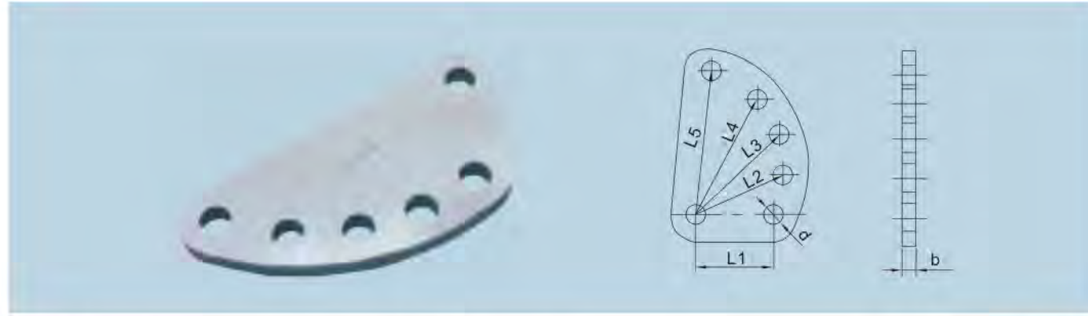

型号 Type	主要尺寸 Dimensions (mm)							破坏荷重 Failure load (kN)	重量 Weight (kg)
	d	b	L_1	L_2	L_3	L_4	L_5		
DB-7	18	16	70	95	120	145	170	70	1.7
DB-10	20	16	80	110	140	170	200	100	2.7
DB-12	24	16	100	135	170	205	240	120	3.2
DB-16	26	18	110	125	140	155	170	160	4.1
DB-20	30	26	120	135	150	165	180	200	7.4
DB-30	39	32	120	140	160	180	200	300	12.5
DB-50	45	38	140	185	230	275	320	500	28.6
DB-60	51	42	135	160	185	210	235	600	31.6

闭口销为不锈钢件，其余为热镀锌钢制件。
Closed catch is stainless steel, others are hot-dip galvanized steel.

PT型调整板
PT TYPE ADJUSTING PLATE

型号 Type	主要尺寸 Dimensions (mm)								破坏荷重 Failure load (kN)	重量 Weight (kg)
	L_0	L_1	L_2	M	d	b	c	L		
PT-7	45	30	45	16	18	16	18	225~230	70	2.0
PT-10	50	40	50	18	20	16	20	250~390	100	2.9
PT-12	60	45	60	22	24	16	24	300~465	120	5.2
PT-16	65	50	60	24	26	18	26	325~505	160	7.0
PT-20	70	60	70	27	30	26	30	350~550	200	10.1
PT-30	80	70	80	36	39	32	38	400~630	300	14.0
PT-50	160	80	100	42	45	38	40	740~1280	500	24.6
PT-60	180	90	100	48	51	42	44	820~1390	600	31.6

热镀锌钢制件。
Hot-dip galvanized steel.

L型联板
L TYPE YOKE PLATE

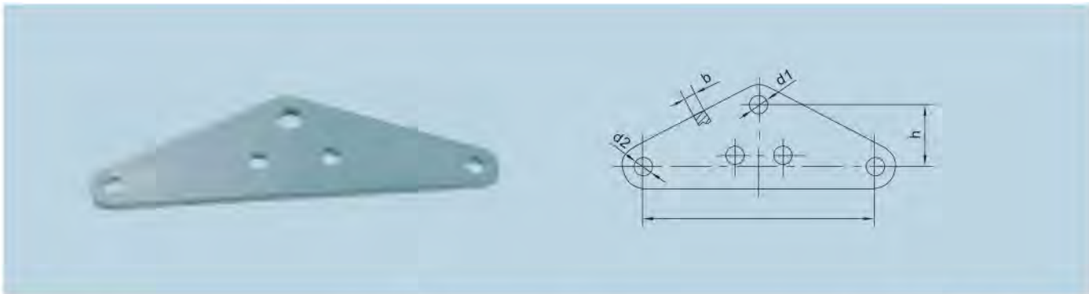

型号 Type	主要尺寸 Dimensions (mm)					破坏荷重 Failure load (kN)	重量 Weight (kg)
	b	h	d_1	d_2	L		
L-1040	16	70	20	18	400	100	4.5
L-1240	16	70	24	18	400	120	4.7
L-1640	18	100	26	20	400	160	5.9

热镀锌钢制件。
Hot-dip galvanized steel.

L型联板
L TYPE YOKE PLATE

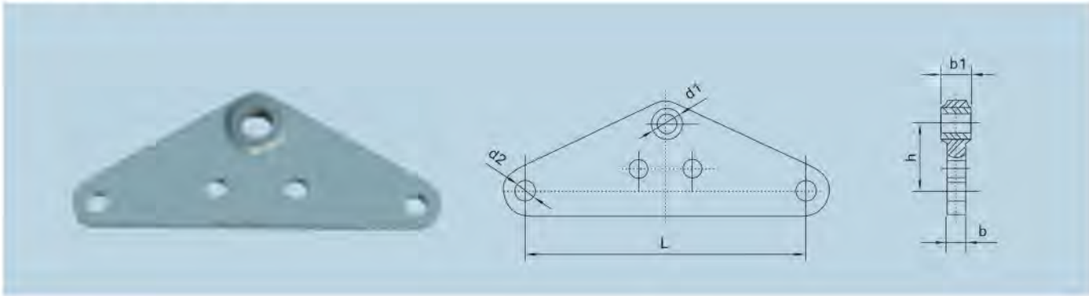

型号 Type	主要尺寸 Dimensions (mm)						破坏荷重 Failure load (kN)	重量 Weight (kg)
	b_1	b	h	d_1	d_2	L		
L-2040	26	16	100	55	30	400	200	7.0
L-2540	30	16	110	60	33	400	250	9.0
L-3040	32	18	110	70	39	400	300	10.0
L-3055	32	18	200	39	26	550	300	10.0
L-3075	32	18	250	39	26	750	300	17.0
L-5045	42	32	250	82	33	450	500	25.0
L-5060	38	32	250	45	33	600	500	26.0
L-6045	42	32	200	51	39	450	600	28.0

热镀锌钢制件。
Hot-dip galvanized steel.

L型联板
L TYPE YOKE PLATE

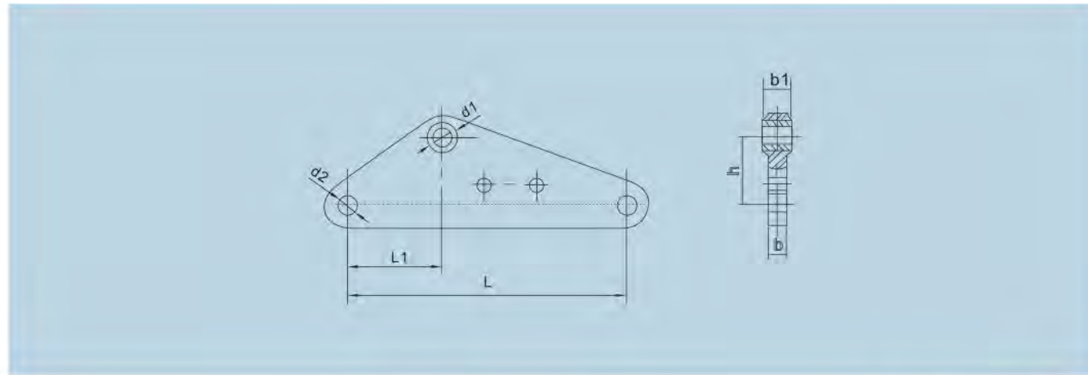

型号 Type	主要尺寸 Dimensions (mm)							破坏荷重 Failure load (kN)	重量 Weight (kg)
	b_1	b	h	d_1	d_2	L_1	L		
L-2060	26	18	120	30	24	200	600	200	11.8
L-3060	32	18	140	39	30	200	600	300	16.7

热镀锌钢制件。
Hot-dip galvanized steel.

L型联板
L TYPE YOKE PLATE

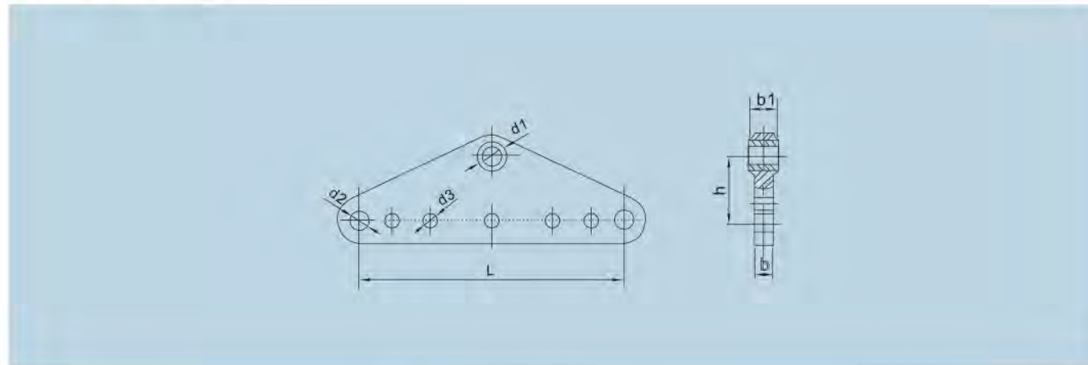

型号 Type	主要尺寸 Dimensions (mm)							破坏荷重 Failure load (kN)	重量 Weight (kg)
	b_1	b	d_1	d_2	d_3	h	L		
L-1245	16	16	24	20	18	100	450	120	5.0
L-1635	18	18	26	20	18	110	450	160	7.9
L-2545	30	22	33	26	18	110	450	250	10.0
L-4045	38	26	30	26	18	110	450	400	25.0

热镀锌钢制件。
Hot-dip galvanized steel.

L型联板
L TYPE YOKE PLATE

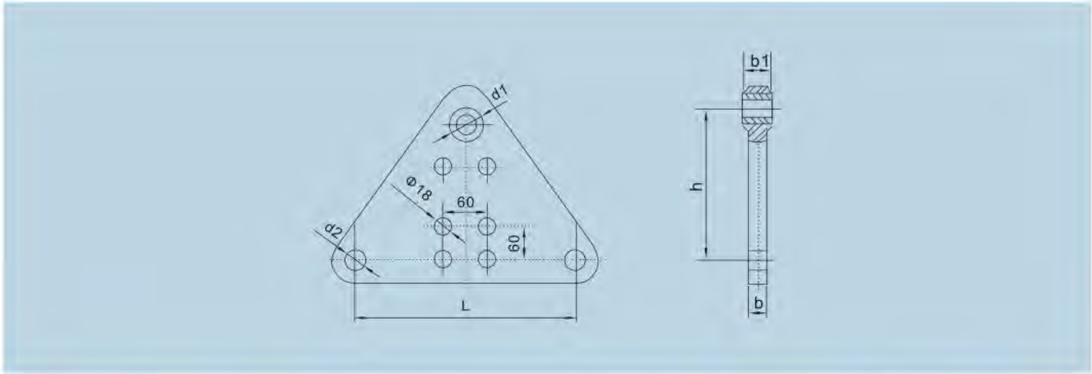

型号 Type	主要尺寸 Dimensions (mm)						破坏荷重 Failure load (kN)	重量 Weight (kg)
	b_1	b	h	d_1	d_2	L		
L-2045	26	16	250	30	30	450	200	10.3
L-3045	32	18	250	30	39	450	300	16.0

热镀锌钢制件。
Hot-dip galvanized steel.

LF型联板
LF TYPE YOKE PLATE

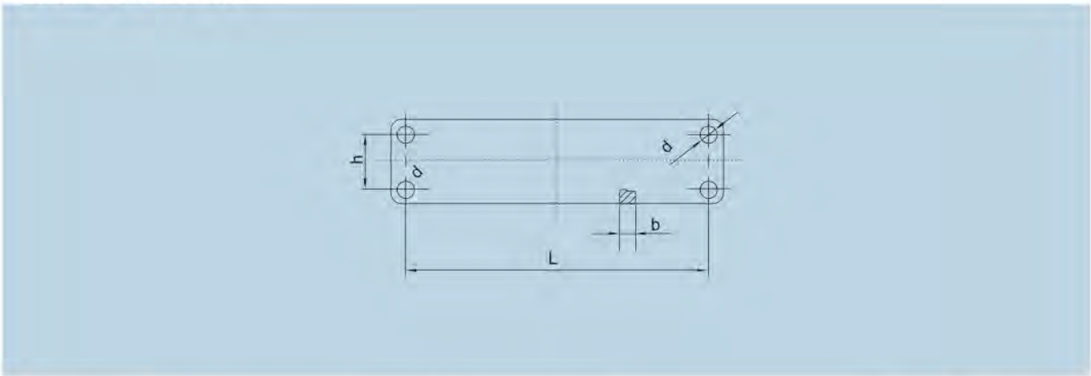

型号 Type	主要尺寸 Dimensions (mm)				破坏荷重 Failure load (kN)	重量 Weight (kg)
	b	h	d	L		
LF-2040	16	70	20	400	200	5.5
LF-2540	16	110	24	400	250	9.2
LF-3040	18	120	26	400	300	11.2
LF-3045	18	100	26	450	300	12.0
LF-3050	18	140	26	500	300	16.5
LF-10050	38	130	45	550	1000	47.0

热镀锌钢制件。
Hot-dip galvanized steel.

LJ型联板
LJ TYPE YOKE PLATE

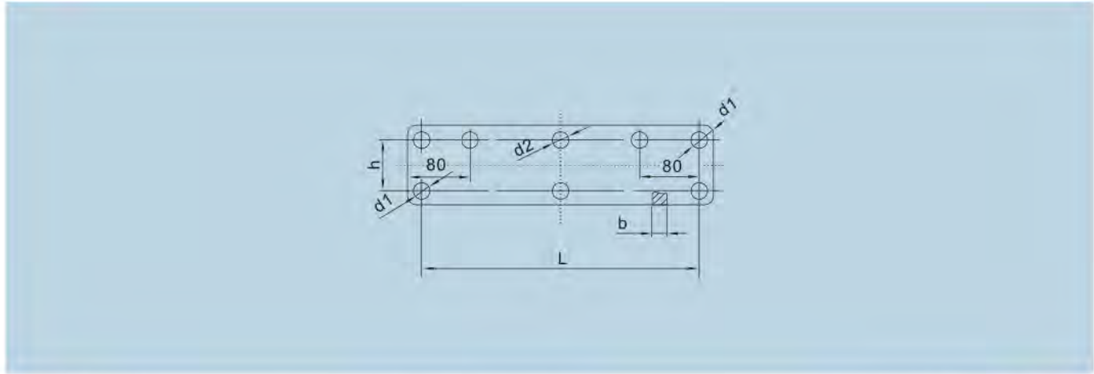

型号 Type	主要尺寸 Dimensions (mm)					破坏荷重 Failure load (kN)	重量 Weight (kg)
	b	h	d_1	d_2	L		
LJ-1040	16	70	18	20	400	100	6.5
LJ-1240	16	70	18	24	400	120	6.5
LJ-1640	18	100	20	26	400	160	9.5

热镀锌钢制件。
Hot-dip galvanized steel.

LJ型联板
LJ TYPE YOKE PLATE

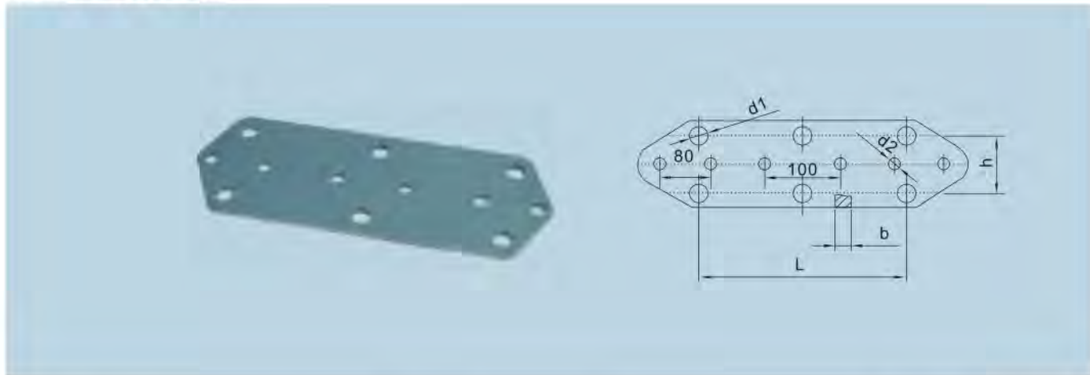

型号 Type	主要尺寸 Dimensions (mm)					破坏荷重 Failure load (kN)	重量 Weight (kg)
	b	h	d_1	d_2	L		
LJ-2540	16	120	24	18	400	250	11.1
LJ-3040	18	120	26	18	400	300	13.6

热镀锌钢制件。
Hot-dip galvanized steel.

LS型联板
LS TYPE YOKE PLATE

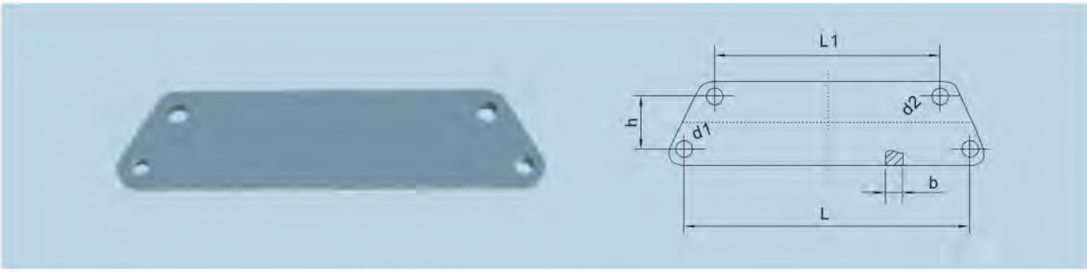

型号 Type	主要尺寸 Dimensions (mm)						破坏荷重 Failure load (kN)	重量 Weight (kg)
	b_1	h	d_1	d_2	L	L_1		
LS-1212	16	65	18	20	400	120	120	5.0
LS-1221	16	65	18	20	400	210	120	5.4
LS-1225	16	65	18	20	400	250	120	5.5
LS-1229	16	65	18	20	400	290	120	5.7
LS-1233	16	65	18	20	400	330	120	5.9
LS-1237	16	65	18	20	400	370	120	6.1
LS-1255	16	65	18	20	400	550	150	8.7
LS-16	18	100	26	26	400	200	160	11.3
LS-32	18	100	20	20	400	200	320	11.3

热镀锌钢制件。
Hot-dip galvanized steel.

LL型联板
LL TYPE YOKE PLATE

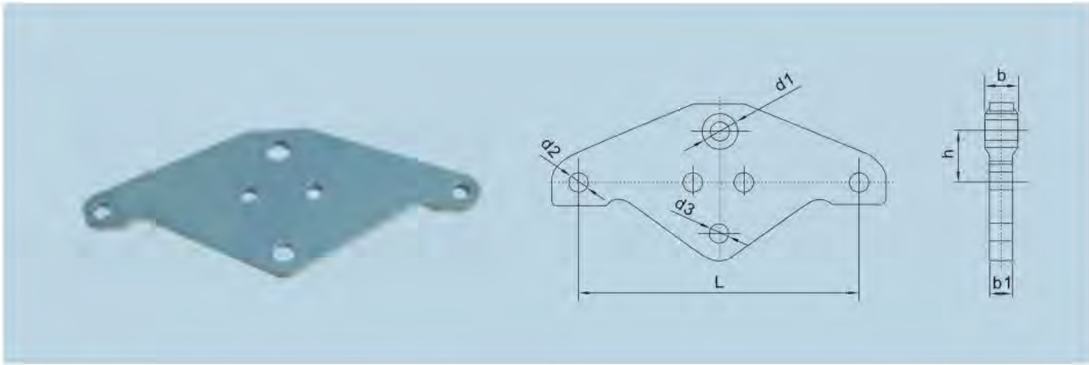

型号 Type	主要尺寸 Dimensions (mm)							破坏荷重 Failure load (kN)	重量 Weight (kg)
	b	b_1	h	L	d_1	d_2	d_3		
LL-1245	16	18	70	450	26	20	24	160	6.9
LL-1645	18	18	70	450	30	20	24	200	8.5
LL-2545	30	18	70	450	33	20	24	250	7.0

热镀锌钢制件。
Hot-dip galvanized steel.

LK型联板
LK TYPE YOKE PLATE

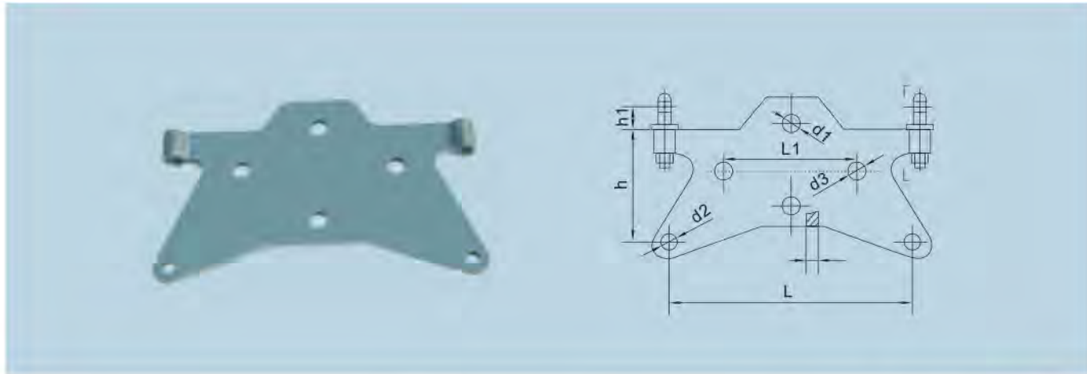

型号 Type	主要尺寸 Dimensions (mm)									破坏荷重 Failure load (kN)	重量 Weight (kg)
	b	h	h_1	L	L_1	d_1	d_2	d_3	d_4		
LK-0745	16	225	40	450	240	18	18	26	18	70	15.5
LK-1045	16	230	40	450	240	20	18	26	18	100	16.0
LK-1645	18	230	40	450	240	26	18	26	18	160	17.0

热镀锌钢制件。
Hot-dip galvanized steel.

KL型联板
KL TYPE YOKE PLATE

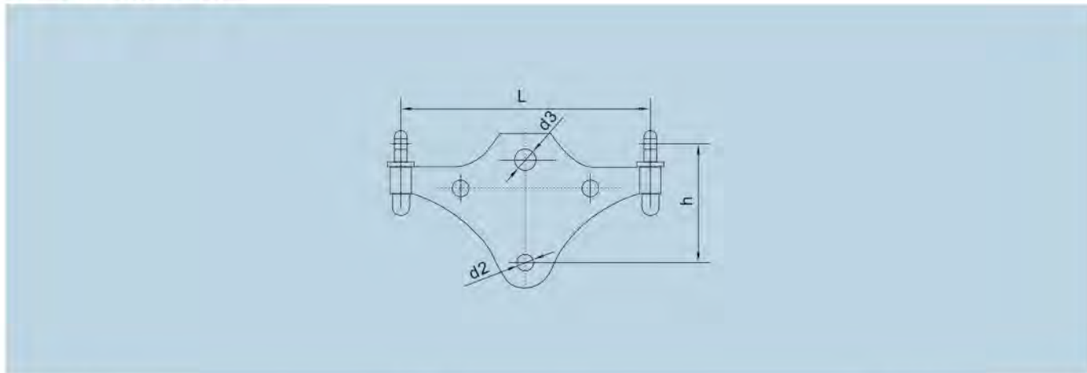

型号 Type	主要尺寸 Dimensions (mm)					破坏荷重 Failure load (kN)	重量 Weight (kg)
	d_1	d_2	h	L	d_3		
KL-1645	18	18	205	450	26	160	9.2
KL-1650	18	18	248	500	26	160	10.8
KL-1655	18	18	291	550	26	160	13.2

热镀锌钢制件。
Hot-dip galvanized steel.

LX型联板
LX TYPE YOKE PLATE

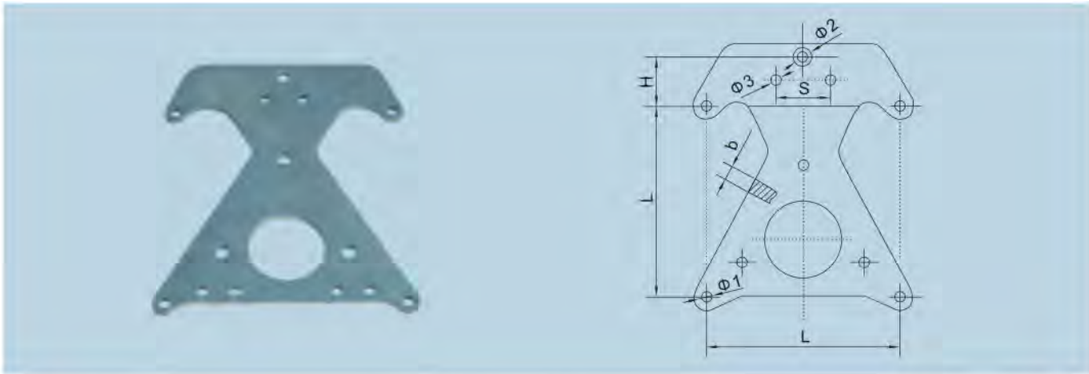

型号 Type	主要尺寸 Dimensions (mm)								破坏荷重 Failure load (kN)	重量 Weight (kg)
	L	H	Φ1	Φ2	Φ3	b	S	b5		
LX-1645	450	95	14	26	14	18	80		160	26.0
LX-1645A	450	95	14	26	14	18	60		160	26.0
LX-2045A	450	95	18	33	18	18	80	26	200	29.0
LX-2545A	450	95	18	33	18	18	80	30	250	29.0

热镀锌钢制件。
Hot-dip galvanized steel.

LXV型联板
LXV TYPE YOKE PLATE

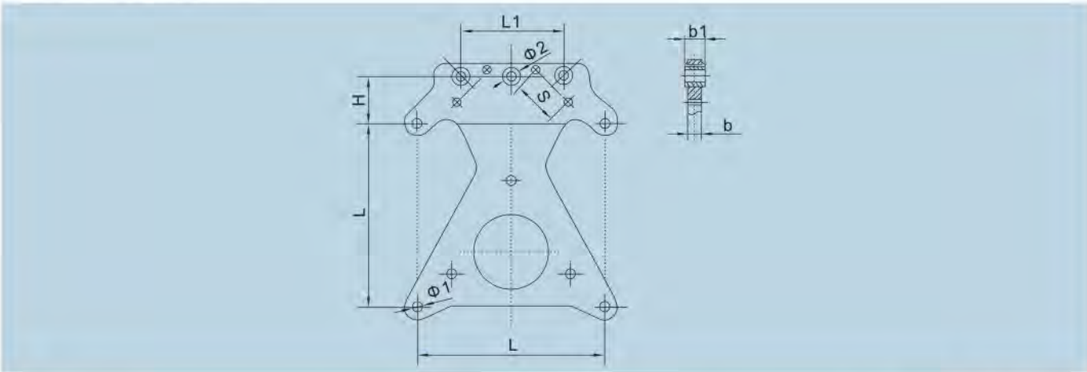

型号 Type	主要尺寸 Dimensions (mm)								破坏荷重 Failure load (kN)	重量 Weight (kg)
	L	L1	b	b1	S	Φ1	Φ2	H		
LXV-1645	450	220	18	18	80	20	26		160	19.5
LXV-2545	450	110	18	30	60	20	33	95	250	20.0

热镀锌钢制件。
Hot-dip galvanized steel.

LXV型联板
LXV TYPE YOKE PLATE

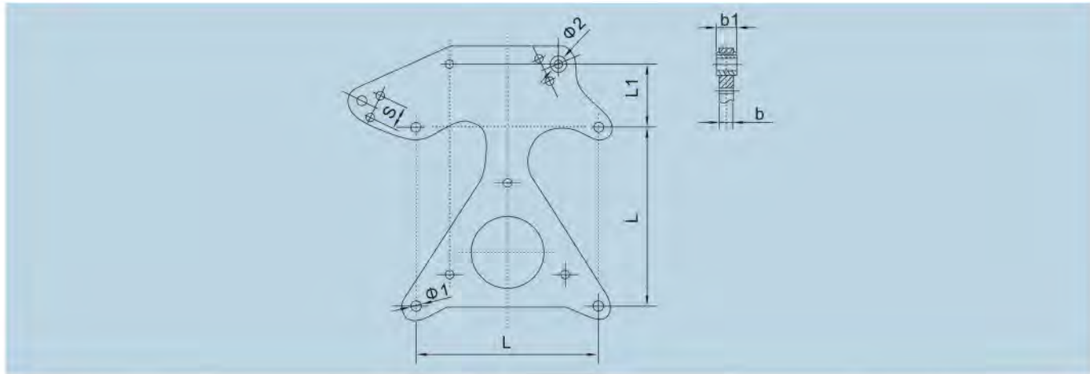

型号 Type	主要尺寸 Dimensions (mm)							破坏荷重 Failure load (kN)	重量 Weight (kg)
	L	L1	b	b1	S	Φ1	Φ2		
LXV-1645Z	450	196	18	18	80	20	26	160	26.6
LXV-2545Z	450	196	18	30	60	20	33	250	30.0

热镀锌钢制件。
Hot-dip galvanized steel.

SP型调平联板
SP TYPE LEVELING FLAT YOKE PLATE

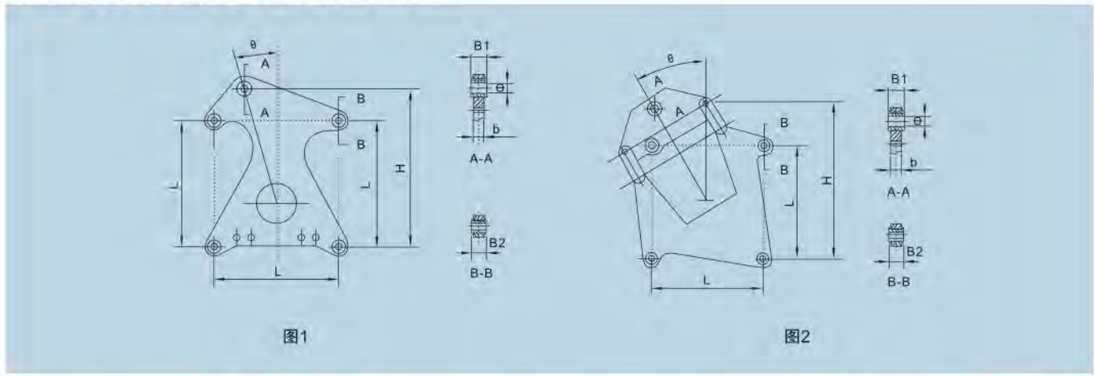

图1 图2

型号 Type	简图 Diagram	偏转角度 θ Deflection angle	主要尺寸 Dimensions (mm)						破坏荷重 Failure load (kN)	重量 Weight (kg)
			B1	B2	b	Φ	L	H		
SP10-2545	1	10°	30	26	16	33	450	582	250	23.0
SP20-2545	1	20°	30	26	16	33	450	596	250	23.0
SP30-2545	2	30°	30	26	16	33	450	595	250	34.0
SP40-2545	2	40°	30	26	16	33	450	560	250	33.0
SP50-2545	2	50°	30	26	16	33	450	560	250	33.0
SP60-2545	2	60°	30	26	16	33	450	595	250	34.0

热镀锌钢制件。
Hot-dip galvanized steel.

LTP型调平联板
LTP TYPE LEVELING FLAT YOKE PLATE

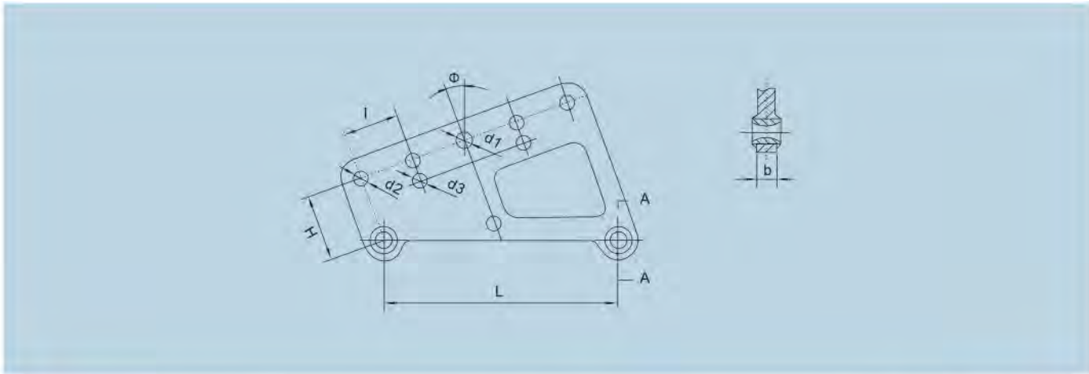

型号 Type	偏转角度 θ Deflection angle	主要尺寸 Dimensions (mm)							破坏荷重 Failure load (kN)	重量 Weight (kg)
		d1	d2	d3	l	b	H	L		
LTP-1640-10	10°	26	18	20	80	18	80	400	160	9.2
LTP-1640-20	20°	26	18	20	80	18	80	400	160	9.4
LTP-1640-30	30°	26	18	20	80	18	80	400	160	9.7
LTP-1640-40	40°	26	18	20	80	18	80	400	160	9.8

热镀锌钢制件。
Hot-dip galvanized steel.

BD型避雷线垂直尽架
LIGHTNING CONDUCTOR SUSPENSION HANGER

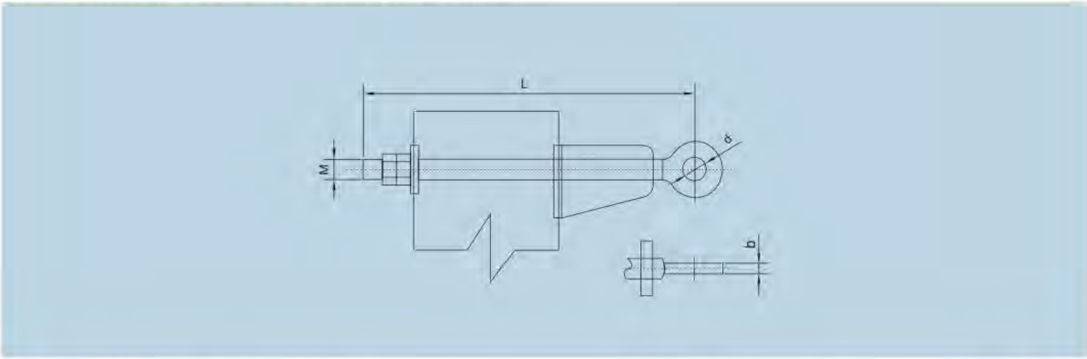

型号 Type	适用范围 Suitable ranye	主要尺寸 Dimensions (mm)				重量 Weight (kg)
		b	M	d	L	
BD-1839	Φ190 锥形钢筋混凝土电杆	18	18	20	390	4.3
BD-2244	Φ230 锥形钢筋混凝土电杆	18	22	20	440	4.8
BD-2451	Φ300 等径钢筋混凝土电杆	18	24	20	510	5.3
BD-2762	Φ400 等径钢筋混凝土电杆	18	27	20	620	7.1

热镀锌钢制件。
Hot-dip galvanized steel.

ZCJ型支撑架
ZCJ TYPE SUPPORT

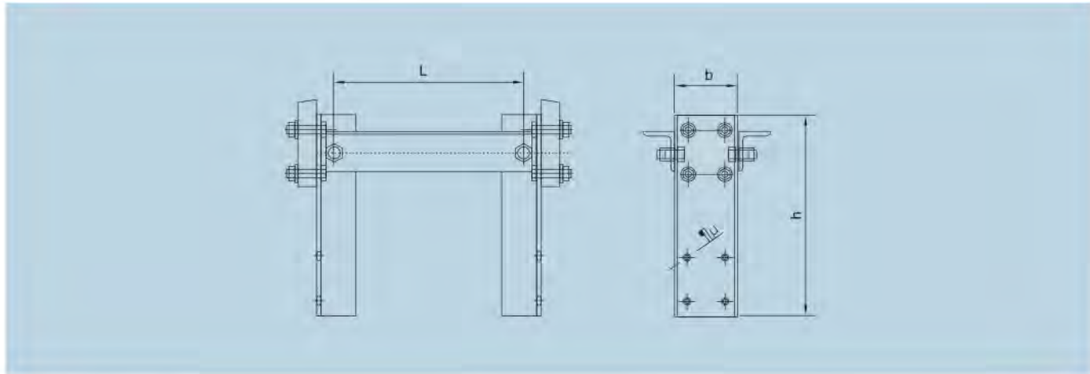

型号 Type	主要尺寸 Dimensions (mm)				重量 Weight (kg)
	Φ	b	h	L	
ZCJ-45	18	120	300	370	10.5
ZCJ-45H	18	120	445	358	14.2

闭口销为不锈钢件，其余为热镀锌钢制件。
Closed catch is stainless steel, others are hot-dip galvanized steel.

U UJ型螺丝
U UJ TYPE BOLT

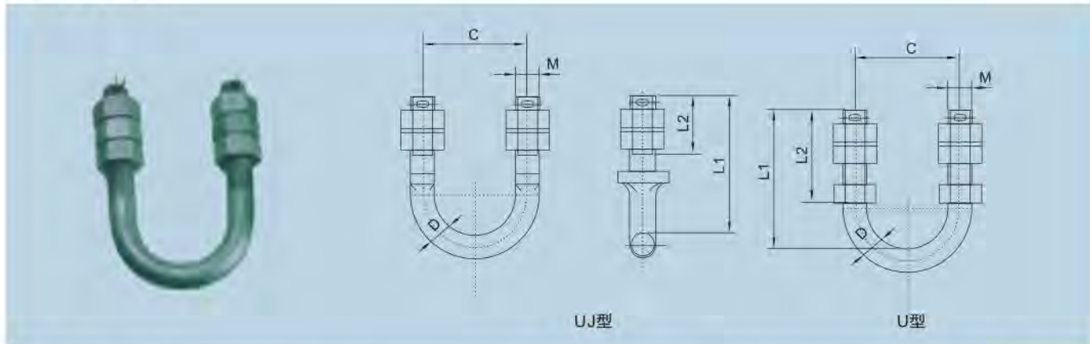

型号 Type	主要尺寸 Dimensions (mm)					额定荷重 Rate load(kN)			重量 Weight (kg)
	C	M	D	L_1	L_2	X向	Y向	Z向	
U-1880	80	18	18	90	60	18	3.6	35	0.8
U-2080	80	20	20	100	70	24	5.0	47	1.1
U-2280	80	22	22	118	90	28	6.6	57	1.3
UJ-1880	80	18	18	105	50	18	5.3	35	0.9
UJ-2080	80	20	20	120	60	24	7.4	43	1.1
UJ-2280	80	22	22	127	65	28	10.6	57	1.4

闭口销为不锈钢件，其余为热镀锌钢制件。
Closed catch is stainless steel, others are hot-dip galvanized steel.

FYB YJB型预绞丝补修条
PERFORMED REPAIR ARMOR

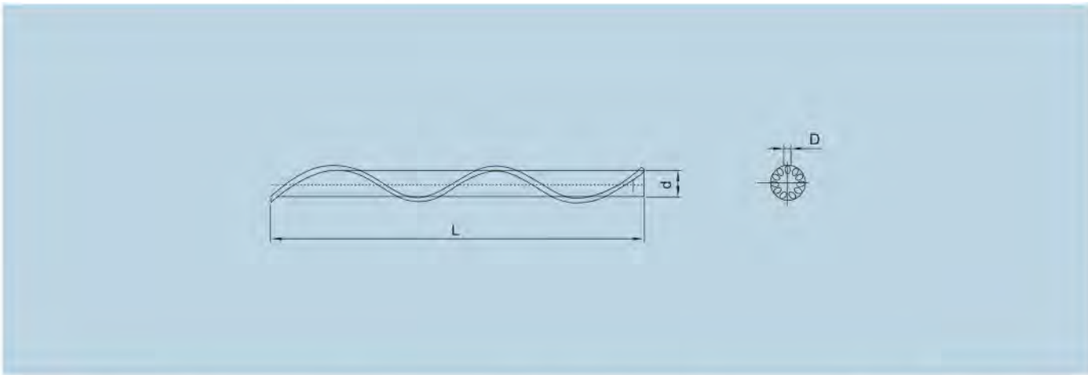

型号 Type	适用导线范围(mm²) Suitable section of conductor	主要尺寸 Dimensions (mm)			每组根数 Croups for each	重量 Weight (kg)
		D	d	L		
FYB-95/15	LGJ-95/15	3.6	11.4	420	13	0.14
FYB-95/20	LGJ-95/20	3.6	11.4	420	13	0.16
FYB-95/55	LGJ-95/55	3.6	13.3	420	16	0.17
FYB-120/7	LGJ-120/7	3.6	12.0	450	14	0.18
FYB-120/20	LGJ-120/20	3.6	12.5	450	14	0.18
FYB-120/25	LGJ-120/25	3.6	13.0	450	14	0.18
FYB-150/8	LGJ-150/8	3.6	13.3	480	16	0.20
FYB-150/20	LGJ-150/20	3.6	14.8	480	16	0.21
FYB-150/25	LGJ-150/25	3.6	14.2	480	16	0.21
FYB-150/35	LGJ-150/35	3.6	14.5	480	16	0.21
YJB-35	LGJ-35	3.6	7.1	270	9	0.08
YJB-50	LGJ-50	3.6	8.2	300	10	0.09
YJB-70	LGJ-70	3.6	9.7	340	11	0.12
YJB-95	LGJ-95	4.6	11.6	420	11	0.23
YJB-120	LGJ-120	4.6	12.9	450	12	0.27
YJB-150	LGJ-150	4.6	14.4	480	13	0.30
YJB-185	LGJ-185	4.6	16.2	580	14	0.39
YJB-240	LGJ-240	6.3	18.4	640	12	0.66
YJB-300	LGJ-300	6.3	20.5	700	13	0.80
YJB-400	LGJ-400	6.3	23.8	820	14	1.05
YJB-300Q	LGJ-300Q	6.3	20.0	700	13	0.80
YJB-400Q	LGJ-400Q	6.3	23.0	820	14	1.05
YJB-500Q	LGJ-500Q	7.8	25.7	870	13	1.74

铝合金制件。 Aluminum alloy material.

QPZ球型避雷针 JDB接地棒、夹
QPZ BALL TYPE LIGHTING ROD, JDB EARTH ROD, CLAMP

适用范围 Application

适用于高楼顶上避雷，采用铜制造。

It is suitable for anti-lighting on top of high building, made of copper tube.

重量

(1)拉棒 Stay rod
规格：6"× ϕ18
8"× ϕ18
6"× ϕ20
8"× ϕ20

(2)接地铜线 Rod line
规格：10m 20m

(3) 连接管 Coupling

规格 Type	10；12；14；16 18；20；22；24

1. 备注：平、滚花、油洗。
Remark: flat, knurling, oil washing.

(4) 夹子 Clamp

规格 Type	10×14.5；14×16；16×19；19×22；22×25

(3) 连接管 Coupling

规格 Type	Φ8×1m；Φ10×1m；Φ12×1m；Φ12.7×1m；Φ13×1m；Φ14×1m；Φ14.5×1m；Φ15×1m；Φ16×1m；Φ18×1m；Φ19×1m；Φ20×1m；Φ20.5×1m；Φ22×1m；Φ24×1m；Φ25×1m；Φ30×1m；

1. 铜皮厚度(Thickness of copper piece)：0.25mm；0.5mm；1mm。
1. 备注：一头平一头尖；一头平一头平螺纹；一头平一头尖两头螺纹。
Remark: one end flat, other end shape; one end flat, other shape thread; one end flat, other shape, two ends thread.

QPZ球型避雷针 JDB接地棒、夹
QPZ BALL TYPE LIGHTING ROD, JDB EARTH ROD, CLAMP

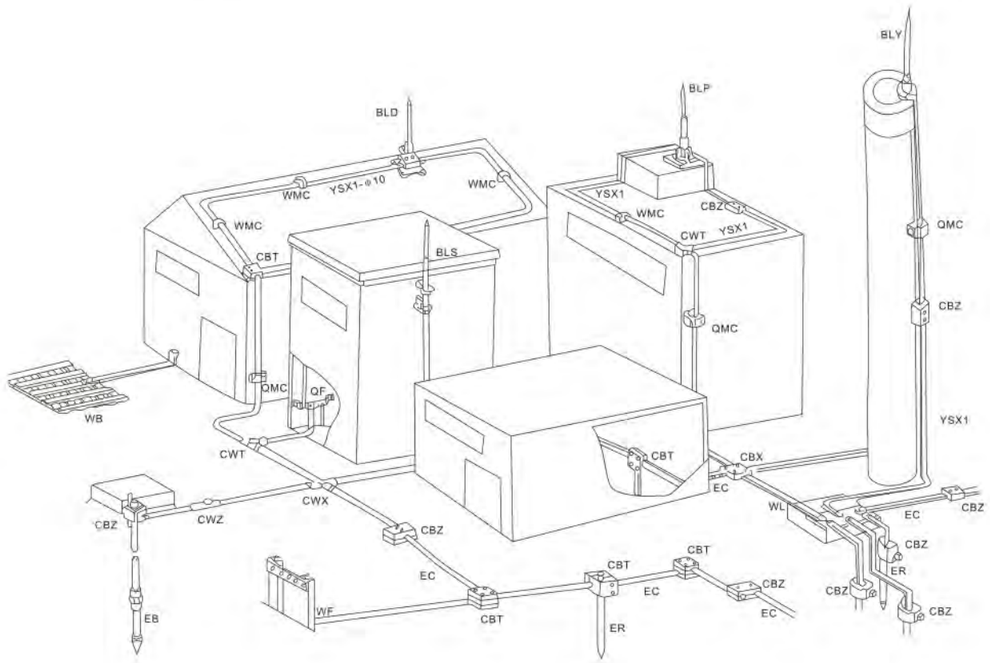

ER--整体接地棒
EB--分节型接地棒
EG--接地棒端盖
EC--接地线(圆截面、扁截面)
YSX1--避雷带(圆截面、扁截面)
WB--网板
WL--汇流板
WF--室外分线中心

BLY--烟囱避雷针
BLD--斜屋避雷针
BLP--平屋避雷针
BLC--侧墙避雷针
BLS--山墙避雷针

CBZ--螺栓型直线连接器
CBT--螺栓型交叉连接器
CBX--螺栓型十字连接器
CWZ--熔焊型直线连接器
CWT--熔焊型交叉连接器
CWX--熔焊型十字连接器

WMC--屋面支架
QMC--墙面支架
BK--抱箍连接件
BX--伸缩补偿件
QF--接地中心

FD型防振锤
DAMPERS

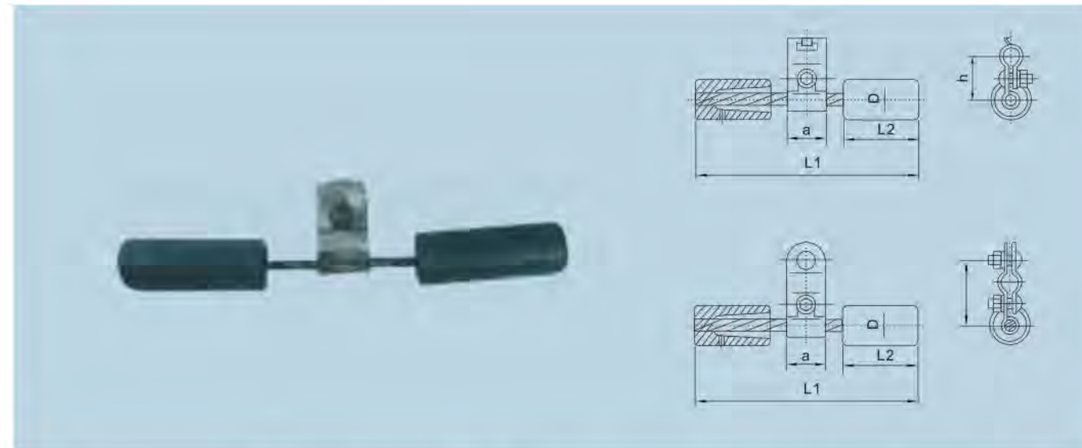

型号 Type	绞线截面(mm²) Steand section area		简图 Diagram	主要尺寸 Dimensions (mm)					钢绞线规格 Steel of steel strand	锤头重量 Damper weight	重量 Weight (kg)
	钢绞线 Steel strand	铝绞线、钢芯铝绞线		D	a	h	L1	L2			
FD-1	-	35-90	2	40	40	40	300	95	7/2.6	0.54	1.5
FD-2	-	70-90	1	46	45	55	370	130	7/3.0	0.94	2.4
FD-2.1	-	70-90	1	46	45	55	370	130	7/3.0	0.94	2.5
FD-3	-	120-150	1	56	60	65	450	150	19/2.2	1.74	4.5
FD-3.1	-	120-150	1	56	60	65	450	150	19/2.2	1.74	4.7
FD-4	-	185-240	1	62	60	70	500	175	19/2.2	2.17	5.6
FD-4.1	-	185-240	1	62	60	70	500	175	19/2.2	2.17	5.8
FD-5	-	300-500	1	67	70	75	550	200	19/2.6	3.00	7.2
FD-4.1	-	300-500	1	67	70	75	550	200	19/2.6	3.00	7.7
FD-6	-	500-630	1	70	70	75	550	200	19/2.6	3.60	8.6
FD-6.1	-	500-630	1	70	70	75	550	200	19/2.6	3.60	8.9
FD-35	35	-	2	42	45	50	300	100	7/3.0	0.64	1.8
FD-35.1	35	-	2	42	45	50	300	100	7/3.0	0.64	1.9
FD-50	50	-	2	46	45	50	350	130	7/3.0	0.94	2.4
FD-50.1	50	-	2	46	45	50	350	130	7/3.0	0.94	2.5
FD-70	70	-	1	56	50	60	400	150	19/2.2	1.74	4.2
FD-70.1	70	-	1	56	50	60	400	150	19/2.2	1.74	4.4
FD-100	100	-	1	62	60	65	500	175	19/2.2	2.40	5.9
FD-100.1	100	-	1	62	60	65	500	175	19/2.2	2.40	5.6

型号中带"1"的产品锤头为灰铸铁件，涂漆，其余为热镀锌钢制件。
Among the types, "1"damper head is pray cast iron, painting, others are hot-dip galvanized steel.

FF型防振锤(500kV 线路用)
DAMPERS (500kV LINE)

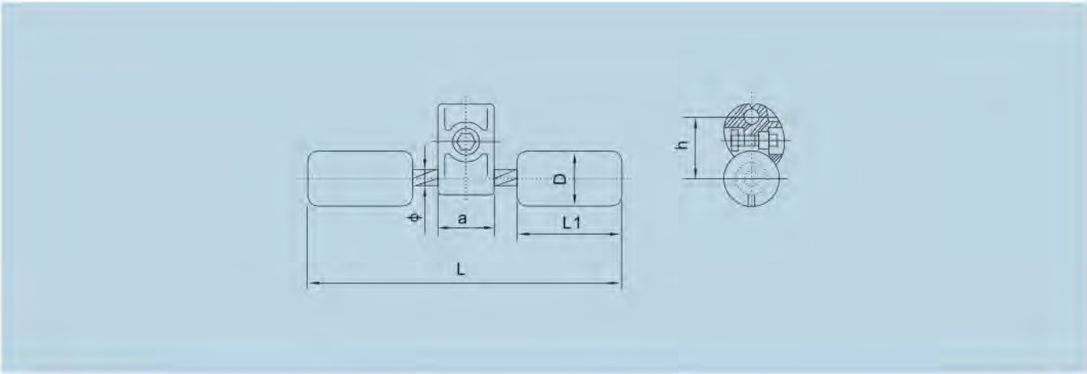

型号 Type	适用导线外径(mm) Suitable dia of conductor	主要尺寸 Dimensions (mm)						重量 Weight (kg)
		L	L1	D	Φ	h	a	
FF-5	23.0-28.0	550	200	67	13	70	70	7.4

线夹为铝合金件，锤头为灰铸铁件，涂漆，其余为热镀锌钢制件。
Clamp is aluminum alloy, damper head is pray cast iron, painting, others are hot-dip galvanized steel.

Fr型防振锤
DAMPERS

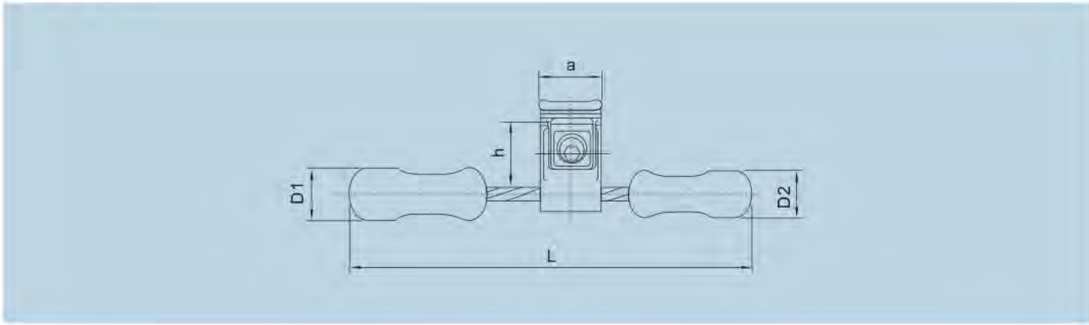

型号 Type	适用导线外径(mm) Suitable dia of conductor	主要尺寸 Dimensions (mm)					重量 Weight (kg)
		L	D1	D2	h	a	
FR-1	7-12	429	48	48	81	50	2.8
FR-2	11-22	429	48	48	81	50	2.8
FR-3	18-28	505	57	57	91	60	5.0
FR-3A	23-34	505	57	57	96	60	5.0
FR-4	23-36	550	64	64	97	60	7.6

线夹为铝合金件，锤头为灰铸铁件，涂漆，其余为热镀锌钢制件。
Clamp is aluminum alloy, damper head is pray cast iron, painting, others are hot-dip galvanized steel.

FDZ型防振(500kV线路用)
DAMPERS FOR 500KV LINE

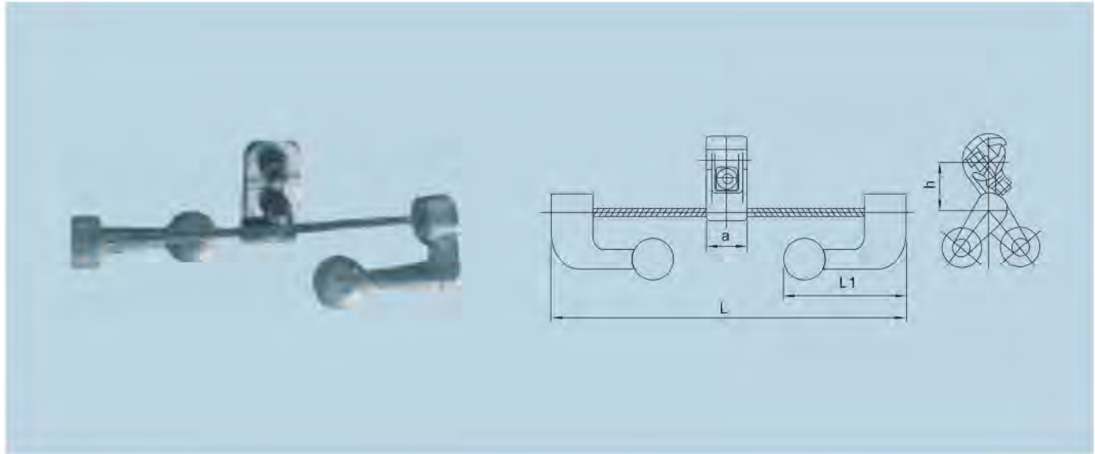

型号 Type	适用导线外径(mm) Suitable dia of conductor	主要尺寸 Dimensions (mm)				钢吊线规格 Messenger wire size	重量 Weight (kg)
		a	h	L1	L		
FDZ-1	7.0~12.0	50	30.7	120	320	19/1.8	1.8
FDZ-2	11.0~15.0	50	30.7	130	350	19/1.8	2.3
FDZ-3	14.0~19.0	60	44.7	150	430	19/2.2	4.4
FDZ-4	18.0~22.5	60	44.7	160	470	19/2.2	5.5
FDZ-5F	22.0~29.0	60	61.5	180	520	19/2.6	7.1
FDZ-6F	28.0~35.0	60	61.5	180	520	19/2.6	8.3
FDZ-1T	7.8	50	30.7	120	320	19/1.8	1.8
FDZ-2T	9.0~9.6	50	30.7	130	350	19/1.8	2.3
FDZ-3T	11.0~11.5	60	44.7	150	430	19/2.2	4.4
FDZ-4T	13.0	60	44.7	160	470	19/2.2	5.5

线夹为铝合金件，锤头为灰铸铁件，涂漆，其余为热镀锌钢制件。T表示铁线夹。
The clamp is aluminum alloy, counter weights are grey iron, painted. The other parts are hot-dip galvanized steel. T-inon clamp.

FJQ型间隔棒
SPACER

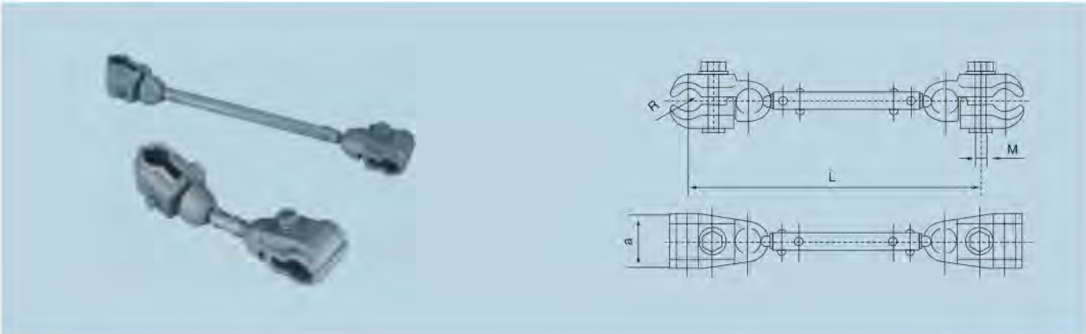

型号 Type	适用导线截面(mm²) Suitable conductor section	主要尺寸 Dimensions (mm)				轴向荷重 (kN)	重量 Weight (kg)
		a	M	r	L		
FJQ-204	185-240	60	12	11.0	200	7	0.9
FJQ-205	300-400	60	12	14.5	200	10	1.1
FJQ-404	185-240	60	12	11.0	400	7	1.0
FJQ-405	300-400	60	12	14.5	400	10	1.2
FJQ-455	300-400	70	16	15.4	450	10	2.4

本体和压板为铝合金件，其余为热镀锌钢制件。
Body and press plate are aluminum alloy,hot-dip galvanized steel.

间隔棒(FJZ型双导线用)
SPACER (FJZ DOUBLE CONDUCTORS)

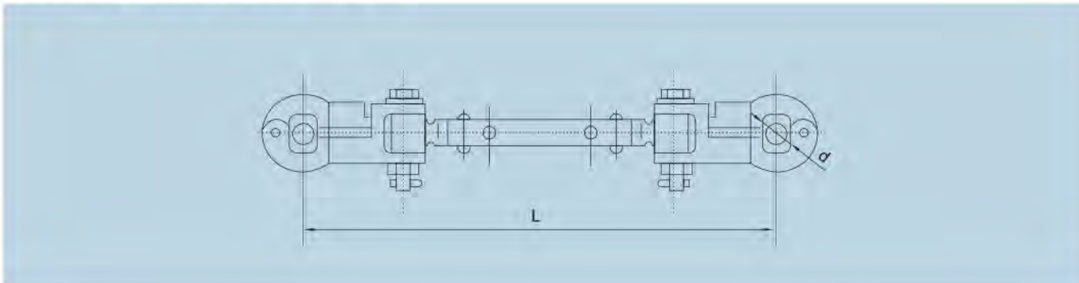

型号 Type	适用导线截面(mm²) Suitable conductor section	主要尺寸 Dimensions (mm)		重量 Weight (kg)
		L	d	
FJZ-240/300	LGJ-300/40-50	400	20-24	3.1
FJZ-240/400	LGJ-400/35-50	400	20-24	3.1

本体和压板为铝合金件，橡胶垫为并用胶，其余为热镀锌钢制件。
Body and press plate are aluminum alloy, rubber pad is alloy rubber, others are hot-dip galvanized steel.

间隔棒(FJZ型双导线用)
SPACER (FJZ DOUBLE CONDUCTORS)

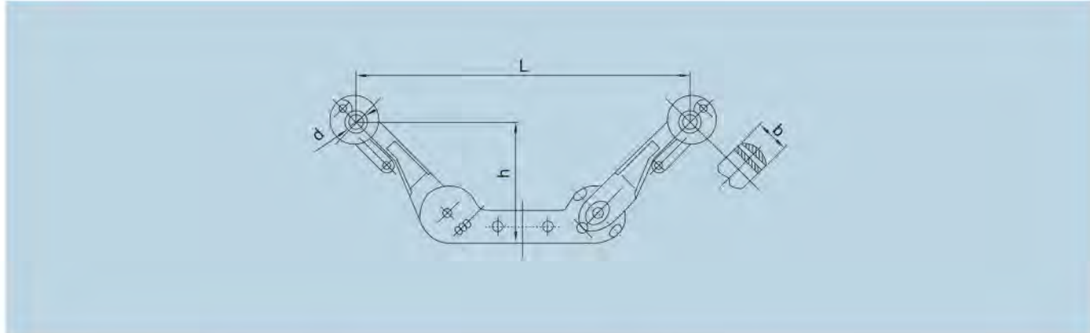

型号 Type	适用导线截面(mm²) Suitable conductor section	主要尺寸 Dimensions (mm)				重量 Weight (kg)
		d	b	h	L	
FJZ-255/400	LGJ-400/50-95	27	56	178	550	4.0

本体和压板为铝合金件，橡胶垫为并用胶，其余为热镀锌钢制件。
Body and press plate are aluminum alloy, rubber pad is alloy rubber, others are hot-dip galvanized steel.

FFJQ型间隔棒
SPACER

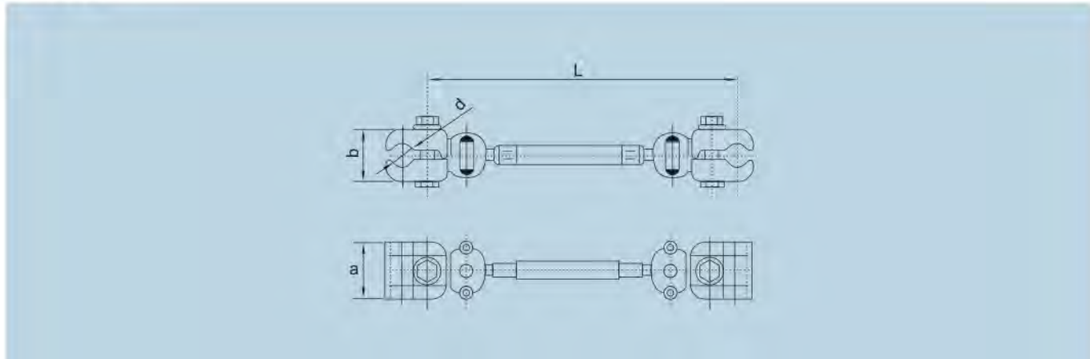

型号 Type	适用导线截面(mm²) Suitable conductor section	主要尺寸 Dimensions (mm)				重量 Weight (kg)
		a	b	L	d	
FFJQ-404	LGJ-240/30-55	62	60	400	20-21	2.0
FFJQ-405	LGJ-300/40-70	62	60	400	22-27	2.0
	LGJ-400/50-95					

本体和压板为铝合金件，橡胶垫为并用胶，其余为热镀锌钢制件。
Body and press plate are aluminum alloy, rubber pad is alloy rubber, others are hot-dip galvanized steel.

TJ型间隔棒(500kV跳线用)
SPACER (500kV JUMPER CONDCTOR)

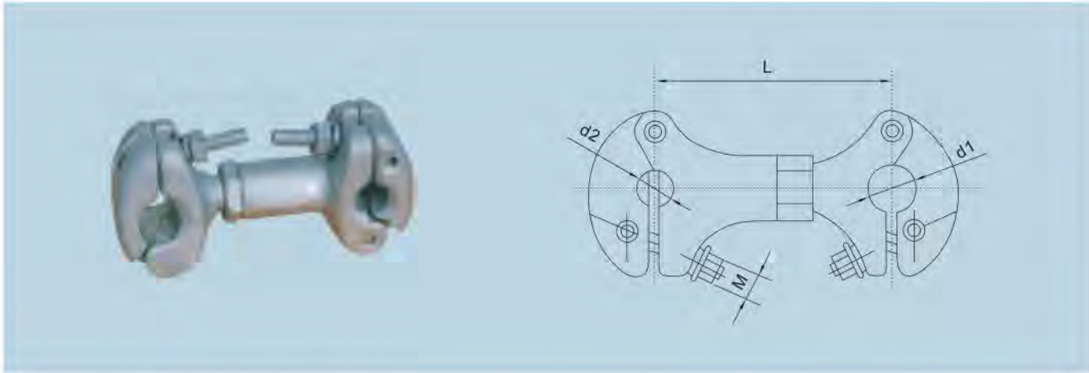

型号 Type	适用导线截面(mm²) Suitable conductor section	主要尺寸 Dimensions (mm)				重量 Weight (kg)
		d_1	d_2	M	L	
TJ_2-12300	LGJ-300	24	18	10	120	0.9
TJ_2-12400	LGJ-400	28	22	10	120	0.8

本体和压板为铝合金件，其余为热镀锌钢制件。
Body and press plate are aluminum alloy, others are hot-dip galvanized steel.

JX型间隔棒(三分裂导线用)
SPACER (THEREE-BUNDLE CONDCTOR)

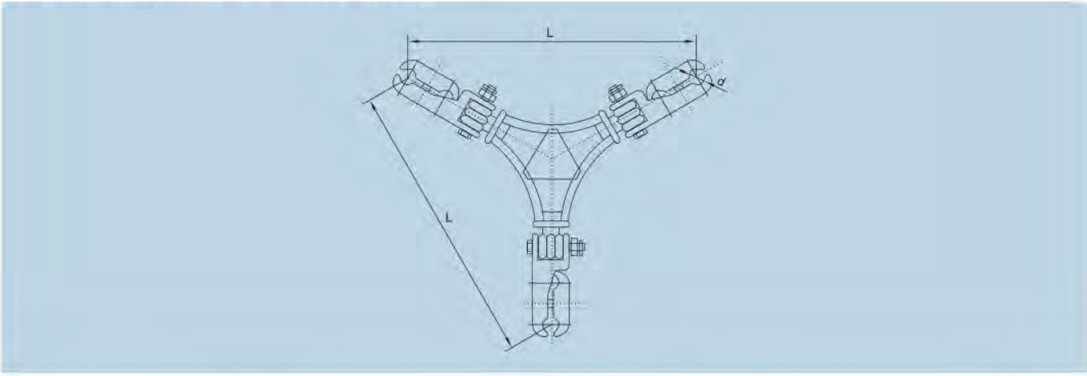

型号 Type	适用导线截面(mm²) Suitable conductor section	主要尺寸 Dimensions (mm)		重量 Weight (kg)
		L	d	
JX_3-300	LGJQ-300	450	26	5.6
JX_3-400	LGJQ-400	450	29	5.6

线夹为铝合金件，阻尼垫为合成橡胶，其余为热镀锌钢制件。
Clamp is aluminum alloy, dumper pad is synthetic rubber, others are hot-dip galvanized steel.

FJZ型间隔棒(三分裂导线用)
SPACER (THREE-BUNDLE CONFDUCTORS)

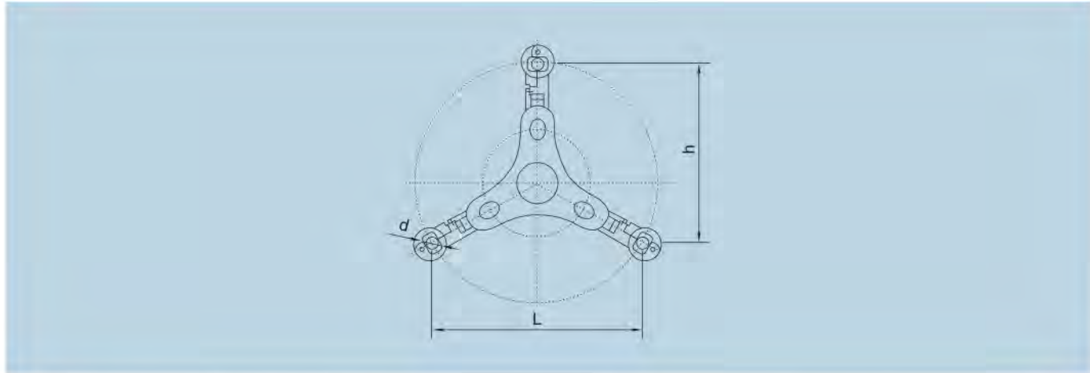

型号 Type	适用导线截面(mm²) Suitable conductor section	主要尺寸 Dimensions (mm)			重量 Weight (kg)
		d	h	L	
FJZ-380/440	HL_4GJT-440	33	640	800	13.2

线夹与腹板为铝合金件，阻尼垫为合成橡胶，其余为热镀锌钢制件。
Clamp and web plate are aluminum alloy, dumper pad is synthetic rubber, others are hot-dip galvanized steel.

FJY型间隔棒(跳线用)
SPACER (JUMPER CONDCTOR)

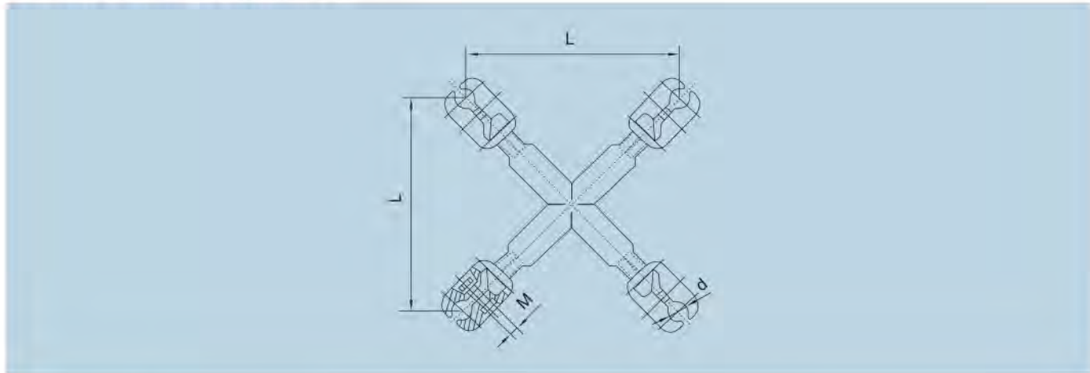

型号 Type	适用导线截面(mm²) Suitable conductor section	主要尺寸 Dimensions (mm)			重量 Weight (kg)
		L	M	d	
FJY_4-20	23-26	200	12	27	2.7
FJY_4-45	23-26	450	12	27	3.1

线夹为铝合金件，其余为热镀锌钢制件。
Clamp is aluminum alloy, others are hot-dip galvanized steel.

FJX型预绞丝阻尼间隔棒
SPACER CLAMPER FOR PERFORMED

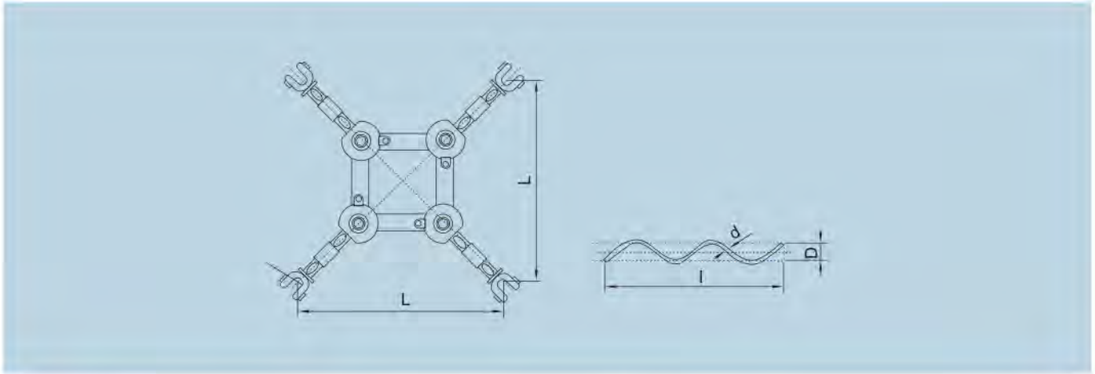

型号 Type	适用导线截面(mm²) Suitable conductor section	主要尺寸 Dimensions (mm)					重量 Weight (kg)
		L	l	R	D	d	
FJS-45/300	LGJ-300	450	1250	14.5	19	6.3	8.0
FJS-45/400	LGJ-400	450	1250	14.5	22	6.3	8.0

预绞丝、线夹和框架为铝合金件，阻尼垫为合成橡胶，其余为热镀锌钢制件。
Performed wire, clamp and frame are aluminum alloy, dumper pad is synthetic rubber, others are hot-dip galvanized steel.

FJZ-F型方框型阻尼间隔棒
SQUARE FRAME TYPE SPACER-DAMPERS

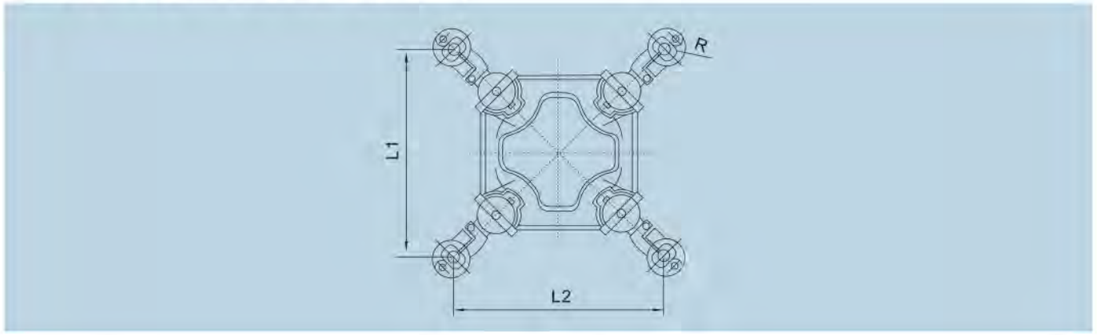

型号 Type	适用导线截面(mm²) Suitable conductor section	主要尺寸 Dimensions (mm)			重量 Weight (kg)
		L_1	L_2	R	
FJZ-445F/300	LGJ-300/20、25、40、50	450	450	9.7	8.4
FJZ-445F/300A	LGJ-300/70	450	450	10.6	8.4
FJZ-445F/400	LGJ-400/50、65	450	450	12.0	8.4
FJZ-445F/400A	LGJ-400/20、25、35	450	450	11.4	8.4
FJZ-445F/400B	LGJ-400/95	450	450	12.6	8.4

线夹、盖板和框架为铝合金件，阻尼垫为合成橡胶，其余为热镀锌钢制件。
Cover plate,clamp and frame are aluminum alloy,damper pad is synthetic rubber, others are hot-dip galvanized steel.

JX型圆环型阻尼间隔棒
DAMPERS

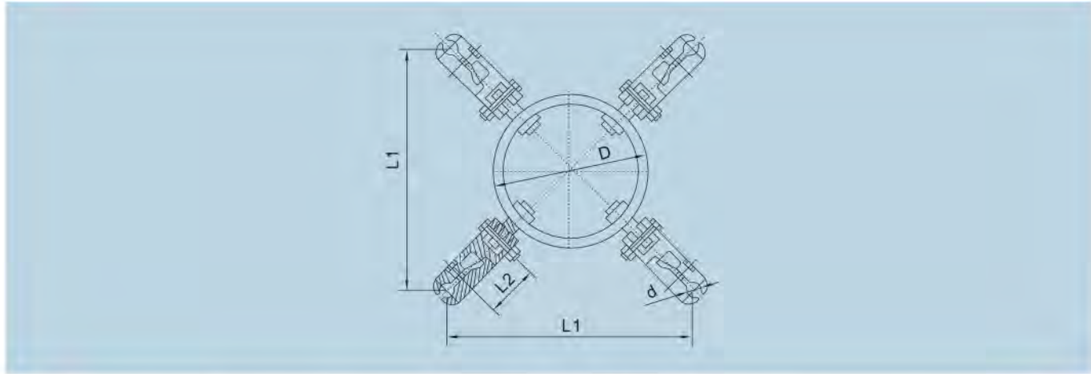

型号 Type	适用导线截面(mm²) Suitable conductor section	主要尺寸 Dimensions (mm)				重量 Weight (kg)
		D	d	L_1	L_2	
JX4-45	LGJ-300	327	26	450	122	7.6
JX4-45A	LGJ-400	327	29	450	122	7.6

线夹为铝合金件，阻尼垫为合成橡胶，其余为热镀锌钢制件。
Clamp is aluminum alloy, damper pad is synthetic rubber, others are hot-dip galvanized steel.

FJY型圆环型阻尼间隔棒
CIRCULAR RING TYPE SPACER-DAMPERS

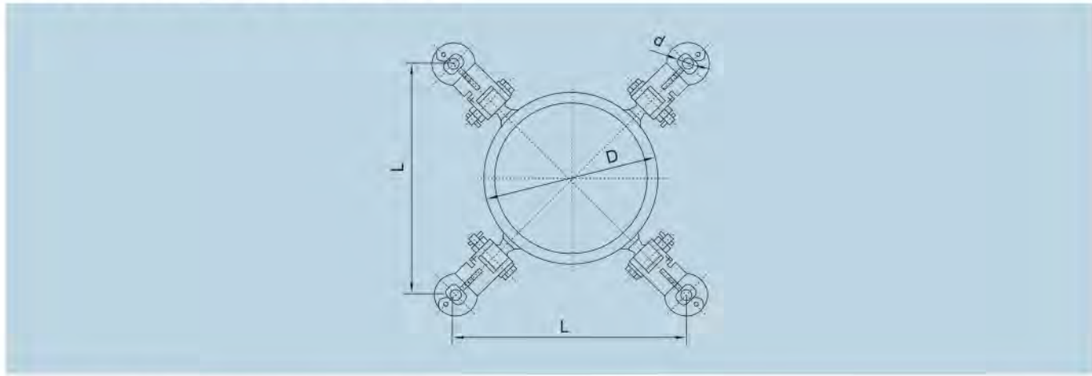

型号 Type	适用导线截面(mm²) Suitable conductor section	主要尺寸 Dimensions (mm)			重量 Weight (kg)
		L	D	d	
FJY-445/300	LGJQ-300	450	327	20	6.8
FJY-445/400	LGJQ-400	450	327	24	6.8

线夹为铝合金件，阻尼垫为合成橡胶，其余为热镀锌钢制件。
Clamp is aluminum alloy, damper pad is synthetic rubber, others are hot-dip galvanized steel.

FJZ型十字型阻尼间隔棒
CROSS SPACER-DAMPERS

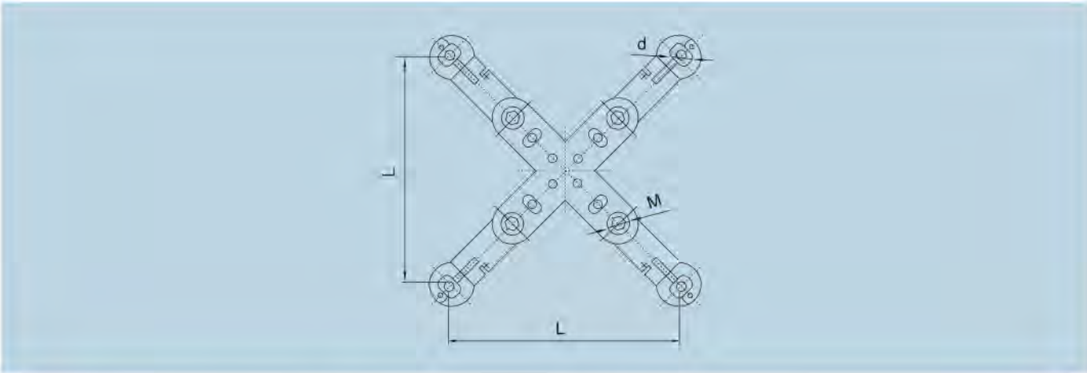

型号 Type	适用导线截面(mm²) Suitable conductor section	主要尺寸 Dimensions (mm)			重量 Weight (kg)
		d	M	L	
FJZ-300	LGJQ-300	20	12	450	8.7
FJZ-400	LGJQ-400	24	12	450	8.7

线夹为铝合金件，阻尼垫为合成橡胶，其余为热镀锌钢制件。
Clamp is aluminum alloy, damper pad is synthetic rubber, others are hot-dip galvanized steel.

FJS型十字型阻尼间隔棒
CROSS SPACER-DAMPERS

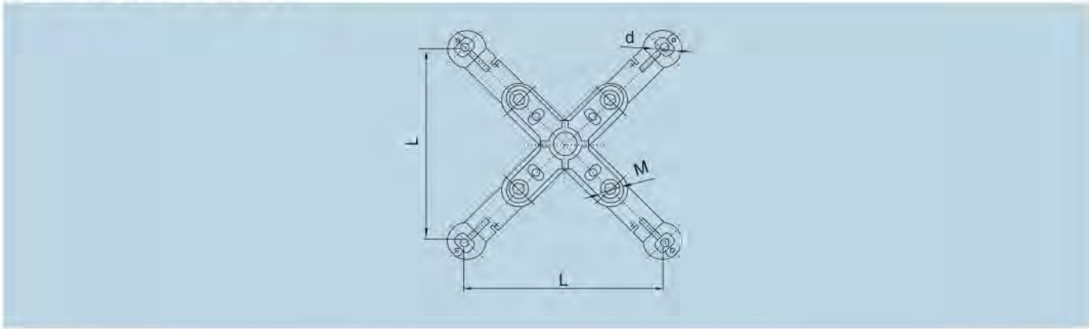

型号 Type	适用导线截面(mm²) Suitable conductor section	主要尺寸 Dimensions (mm)			重量 Weight (kg)
		d	M	L	
FJS-300	LGJ-300/40	20.0	12	450	8.5
	LGJ-300				
FJS-400	LGJ-400	23.5			
FJS-300A	LGJ-300	21.5			
	LGJQ-300				
FJS-400A	LGJ-400	25.5			

预绞丝护线条
PERFORMED ARMOUR

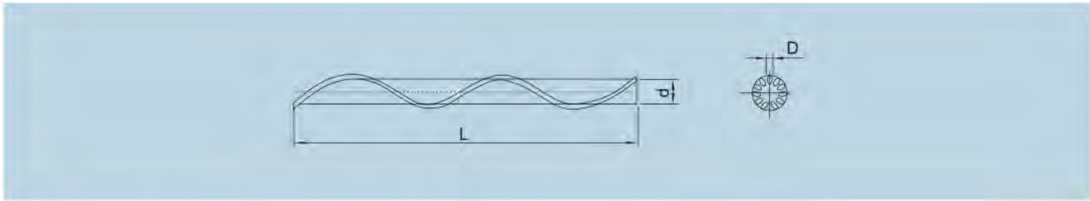

型号 Type	适用导线 Suitable conductor	主要尺寸 Dimensions (mm)			重量 Weight (kg)
		D	d	L	
FYH-95/15	LGJ-95/15	3.6	11.4	1400	0.5
FYH-95/20	LGJ-95/20	3.6	11.4	1400	0.5
FYH-95/55	LGJ-95/55	3.6	13.3	1500	0.6
FYH-120/7	LGJ-120/7	3.6	12.0	1400	0.6
FYH-120/20	LGJ-120/20	3.6	12.5	1400	0.6
FYH-120/25	LGJ-120/25	3.6	13.0	1400	0.6
FYH-120/70	LGJ-120/70	4.6	14.9	1800	0.8
FYH-150/8	LGJ-150/8	3.6	13.3	1500	0.6
FYH-150/20	LGJ-150/20	3.6	14.7	1500	0.7
FYH-150/25	LGJ-150/25	3.6	14.2	1500	0.7
FYH-150/35	LGJ-150/35	3.6	14.5	1500	0.7
FYH-185/10	LGJ-185/10	4.6	14.9	1800	1.2
FYH-185/25	LGJ-185/25	4.6	15.7	1800	1.3
FYH-185/30	LGJ-185/30	4.6	15.7	1800	1.3
FYH-185/45	LGJ-185/45	4.6	16.3	1800	1.3
FYH-210/10	LGJ-210/10	4.6	15.9	1800	1.3
FYH-210/25	LGJ-210/25	4.6	16.6	1800	1.3
FYH-210/35	LGJ-210/35	4.6	16.9	1800	1.3
FYH-210/50	LGJ-210/50	4.6	17.3	1800	1.3
FYH-240/30	LGJ-240/30	4.6	17.9	1900	1.4
FYH-240/40	LGJ-240/40	4.6	17.9	1900	1.4
FYH-240/55	LGJ-240/55	4.6	18.6	1900	1.4
FYH-300/15	LGJ-300/15	6.3	19.1	2000	2.3
FYH-300/20	LGJ-300/20	6.3	19.4	2000	2.3
FYH-300/25	LGJ-300/25	6.3	19.8	2000	2.3
FYH-300/40	LGJ-300/40	6.3	19.9	2000	2.3
FYH-300/50	LGJ-300/50	6.3	20.1	2000	2.3
FYH-300/70	LGJ-300/70	6.3	20.9	2000	2.3
FYH-400/20	LGJ-400/20	6.3	22.3	2200	2.8
FYH-400/25	LGJ-400/25	6.3	22.1	2200	2.8
FYH-400/35	LGJ-400/35	6.3	22.3	2200	2.8
FYH-400/50	LGJ-400/50	6.3	23.0	2200	2.8
FYH-400/65	LGJ-400/65	6.3	23.2	2200	2.8
FYH-400/95	LGJ-400/95	6.3	24.8	2500	2.8
FYH-500/35	LGJ-500/35	7.8	24.9	2500	3.5
FYH-500/45	LGJ-500/45	7.8	24.9	2500	3.5
FYH-500/65	LGJ-500/65	7.8	25.7	2500	3.5
FYH-630/45	LGJ-630/45	7.8	27.9	2500	5.3
FYH-630/55	LGJ-630/55	7.8	28.5	2500	5.3
FYH-630/80	LGJ-630/80	7.8	28.9	2500	5.3
FYH-800/55	LGJ-800/55	7.8	31.8	2500	6.0
FYH-800/70	LGJ-800/70	7.8	32.1	2500	6.0
FYH-800/100	LGJ-800/100	7.8	32.3	2500	6.0

铝合金制件。 Aluminum alloy.

铝包带
ALUMINIUM ARMOR TAPE

型号 Type	公称规格 Nominal scale(mm)	重量 Weight (kg)	
		Kg/m	m/kg
FLD-1	1×10	0.027	37

铝制件。 Aluminum material.

悬重锤及其附件
COUNTER WEIGHT AND ACCESSORY

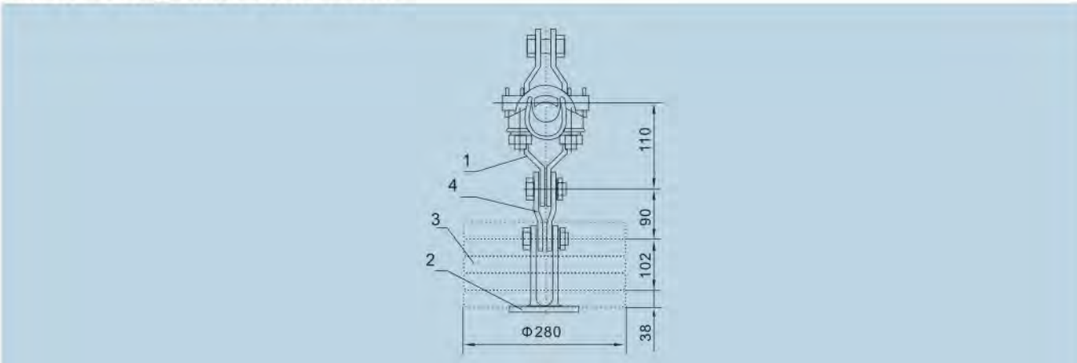

序号 No.	名称 Name	型号 Type	重量 Weight (kg)	备注 Note
1	重锤挂板	ZG-1	0.28	适用于安装XGU-4悬垂线夹上
		ZG-2	0.29	适用于安装XGU-5、6悬垂线夹上
2	重锤座	ZJ-1	1.50	
3	重锤片	ZC-1	15.00	
4	平行挂板	PS-7	0.53	见联结金具

重锤片为灰铸铁件，涂漆，其余为热镀锌钢制件。
Counter weight piece is gray cast iron, paimting, others are hot-dip galvanized steel.

ZC型锤片
COUNTER WEIGHT PIECES

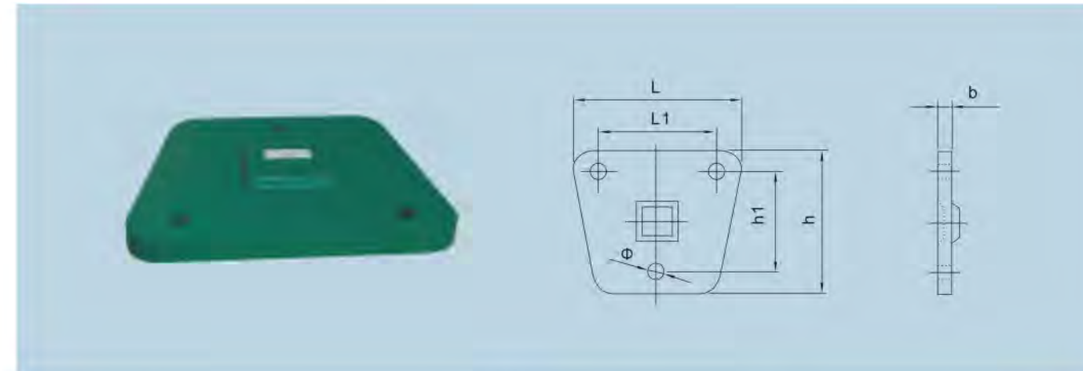

型号 Type	主要尺寸 Dimensions (mm)						重量 Weight (kg)
	L	L_1	h	h_1	b	Φ	
ZC-18	350	240	300	220	30	24	20

ZC型锤片
COUNTER WEIGHT PIECES

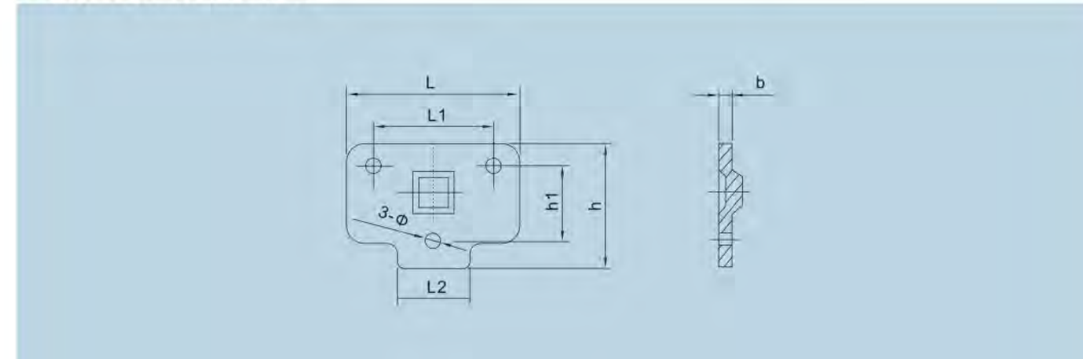

型号 Type	主要尺寸 Dimensions (mm)							重量 Weight (kg)
	L	L_1	L_2	h	h_1	b	Φ	
ZC-20	390	240	200	300	220	30	24	21.8

ZC型重锤片
COUNTER WEIGHT PIECES

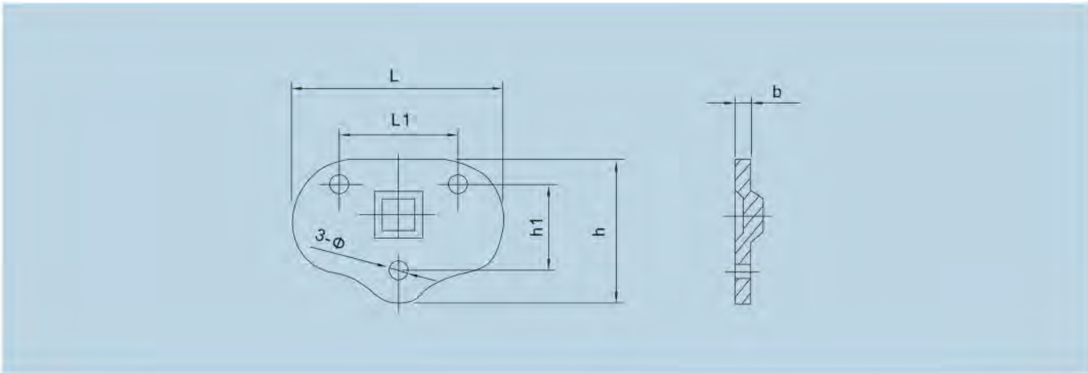

型号 Type	主要尺寸 Dimensions (mm)						重量 Weight (kg)
	L	L_1	h	h_1	b	Φ	
ZC-20	450	240	300	220	30	24	21.8

灰铸铁件，涂漆。
Gray cast iron, painting.

均压屏蔽环(500kV线路用)
GRADING AND SHIELDING RING (500kV LINE)

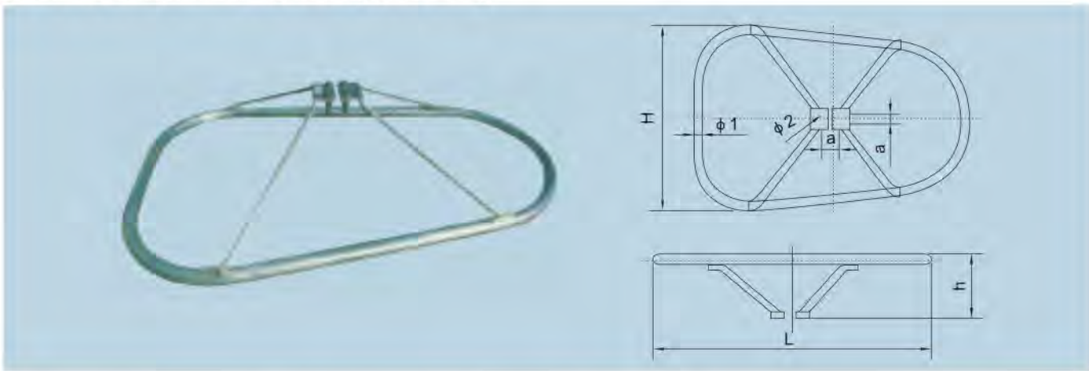

型号 Type	主要尺寸 Dimensions (mm)						重量 Weight (kg)	备注 Note
	H	h	a	$Φ_1$	$Φ_2$	L		
FJP-500N	900	330	60	50	18	1450	18.5	钢制件，热镀锌
FPL-500N	900	330	60	50	18	1450	7.3	铝制件

均压屏蔽环(500kV线路用)
GRADING AND SHIELDING RING(500kV LINE)

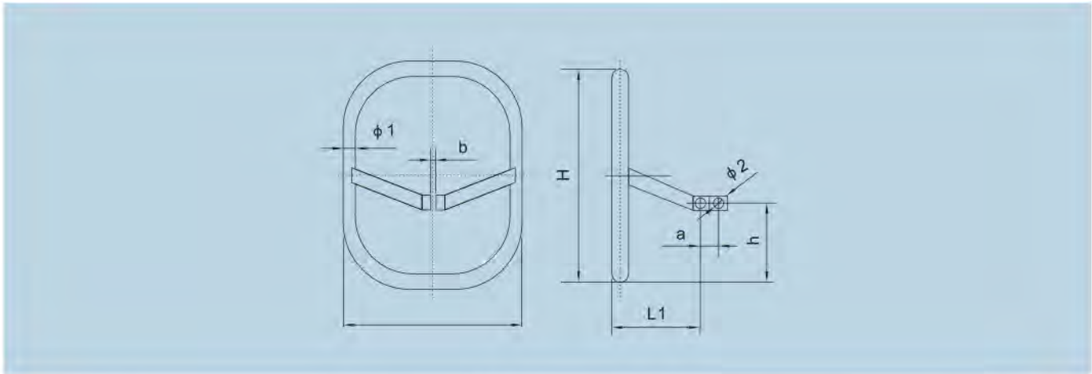

型号 Type	主要尺寸 Dimensions (mm)								重量 Weight (kg)
	L	L_1	H	h	$Φ_1$	$Φ_2$	a	b	
FJP-500XL	600	235	700	250	50	18	60	20	8.7
P1-500X	700	235	800	300	50	18	60	20	9.7

钢制件，热镀锌。
Hot-dip galvanized steel.

均压屏蔽环(500kV线路用)
GRADING AND SHIELDING RING(500kV LINE)

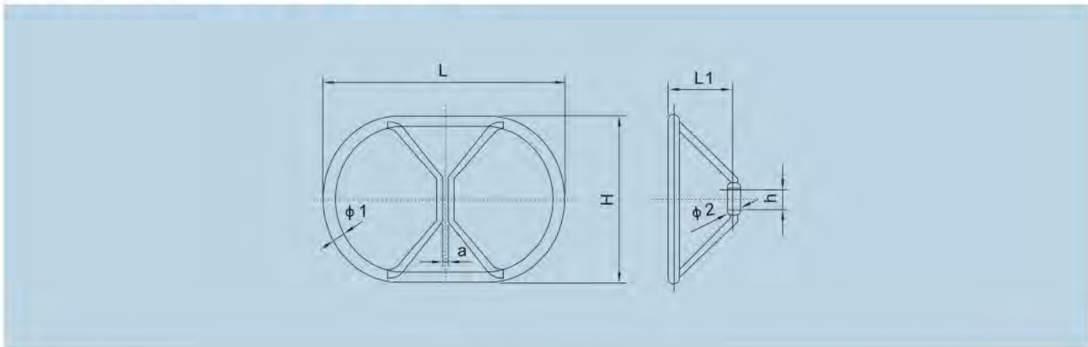

型号 Type	主要尺寸 Dimensions (mm)							重量 Weight (kg)
	L	L_1	H	h	$Φ_1$	$Φ_2$	a	
FJP-500XD	700	290	600	80	50	14	20	8.74
FJP-500XD_1	700	245	600	45	50	14	50	8.95
FJP-500X_4	1150	490	1150	80	50	18	30	20.10

钢制件，热镀锌。
Hot-dip galvanized steel.

均压屏蔽环(500kV线路用)
GRADING AND SHIELDING RING(500kV LINE)

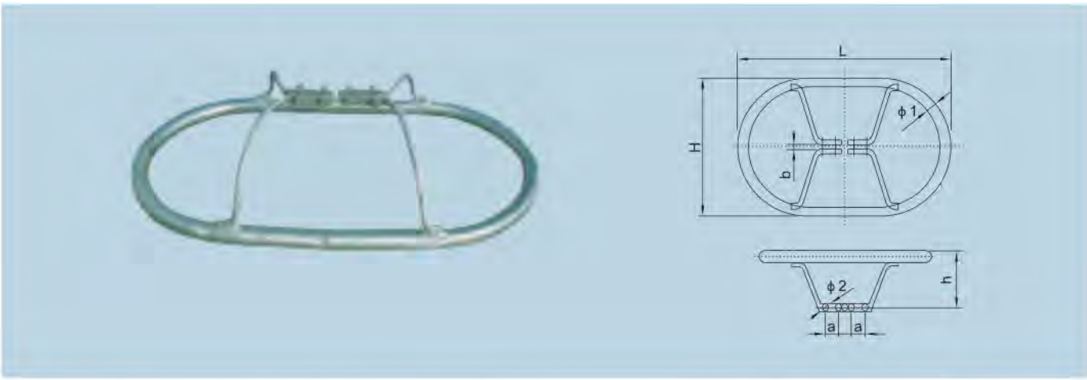

型号 Type	主要尺寸 Dimensions (mm)							重量 Weight (kg)	备注 Note
	L	H	h	Φ1	Φ2	a	b		
FJP-500XS	1050	600	230	50	50	60	22	12.3	钢制件，热镀锌
FPL-500XS	1050	600	230	50	50	60	24	4.4	铝制件

均压屏蔽环(500kV线路用)
GRADING AND SHIELDING RING(500kV LINE)

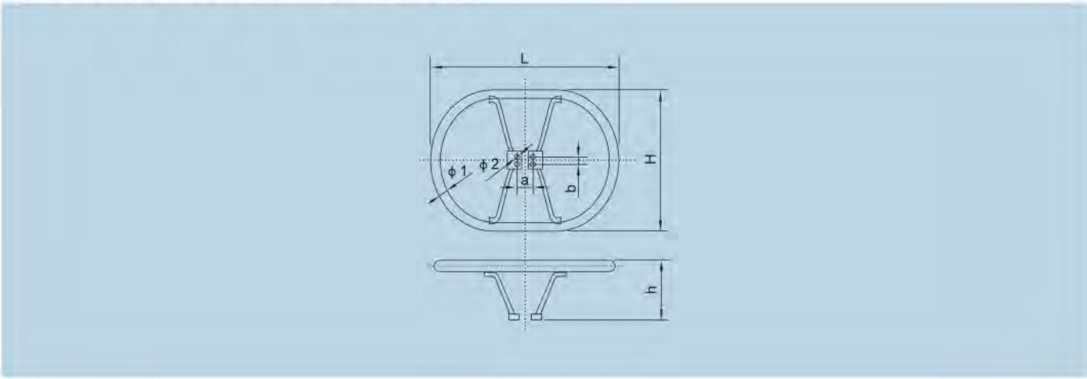

型号 Type	主要尺寸 Dimensions (mm)							重量 Weight (kg)
	L_1	H	h	$Φ_1$	$Φ_2$	a	b	
P_1-500N_4	1050	750	220	50	18	60	60	15.7

钢制件，热镀锌。
Hot-dip galvanized steel.

均压屏蔽环(300kV线路用)
GRADING AND SHIELDING RING(300kV LINE)

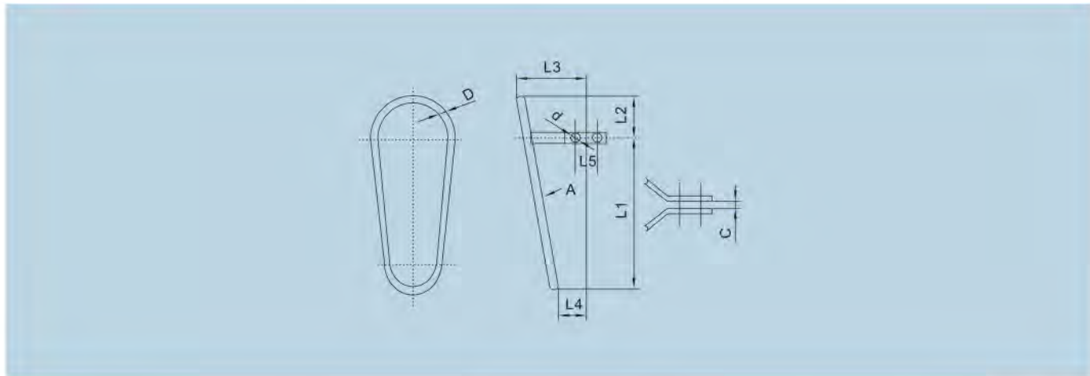

型号 Type	主要尺寸 Dimensions (mm)								重量 Weight (kg)
	D	d	c	L_1	L_2	L_3	L_4	L_5	
FJP-300-N	32	18	24	652	352	392	120	80	5.2
J-300N	32	18	24	702	372	176	136	80	5.0

钢制件，热镀锌。
Hot-dip galvanized steel.

均压屏蔽环(300kV线路用)
GRADING AND SHIELDING RING(300kV LINE)

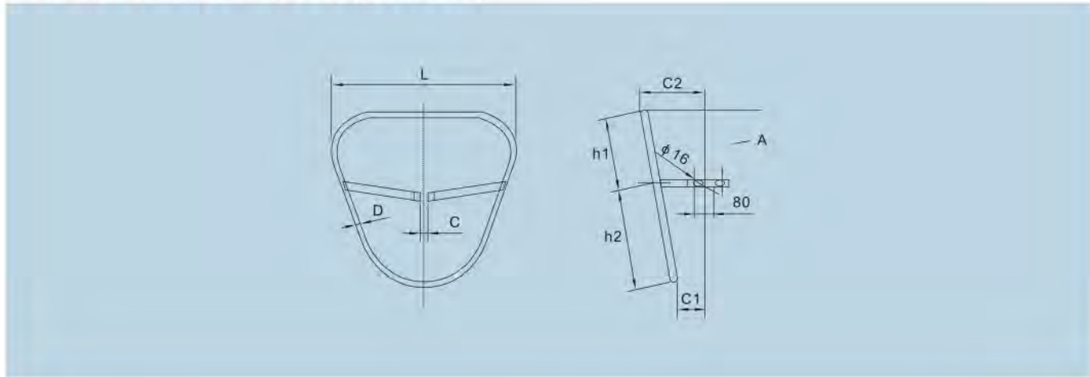

型号 Type	主要尺寸 Dimensions (mm)							重量 Weight (kg)
	C	C_1	C_2	D	h_1	h_2	L	
FJP-300-X	18	145	220	32	270	350	800	5.4
FJP-300-NB	26	150	392	32	320	380	800	5.6

钢制件，热镀锌。
Hot-dip galvanized steel.

NX型楔型线夹
WEDGE TYPE CONNECTOR

型号 Type	钢绞线外径(mm) Suitable dia of steel wire	主要尺寸 Dimensions(mm)			破坏荷重 Failure load (kN)	重量 Weight(kg)
		C	M	L		
NX-1	6.6-7.8	18	16	150	45	1.2
NX-2	9.0-11.0	20	18	180	88	1.8
NX-3	13.0-14.0	24	24	200	143	3.2

线夹的本体和楔子为可锻铸铁，热镀锌。闭口销为不锈钢制件，其余为钢制件，热镀锌。
Clamp body and wedge is cast iron and hot galvanizing. Closed catch is stainless steel,others are hot-dip galvanized steel.

NUT型线夹(可调式)
NUT TYPE CONNECTOR (ADJUSTABLE)

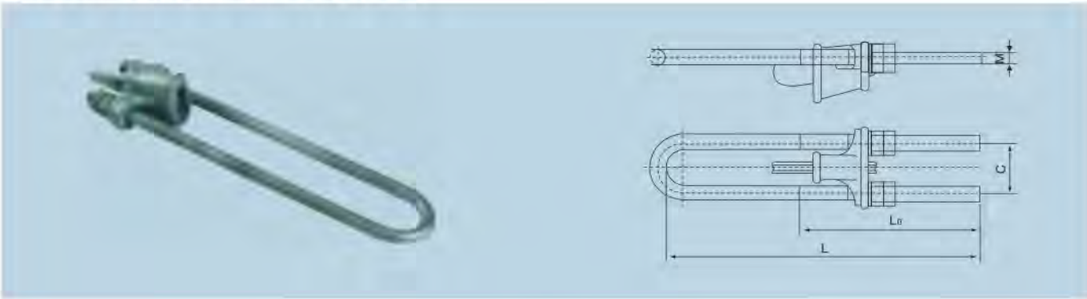

型号 Type	钢绞线外径(mm) Suitable dia of steel wire	主要尺寸 Dimensions(mm)				破坏荷重 Failure load (kN)	重量 Weight(kg)
		M	L	L0	C		
NUT-1	6.6-7.8	16	350	200	56	45	2.1
NUT-2	9.0-11.0	18	430	250	62	88	3.2
NUT-3	13.0-14.0	22	500	300	74	143	5.4
NUT-4	15.0-16.0	24	580	350	82	164	7.2

线夹的本体和楔子为可锻铸铁，其余为钢制件，全部热镀锌。如需防盗，可另购防盗装置。
Clamp body and wedge are cast iron,others are steel, all are hot galvanizing.If theft-proof, you can order theft-proof mount.

NU型线夹(不可调式)
NU CONNECTOR (NO-ADJUSTING)

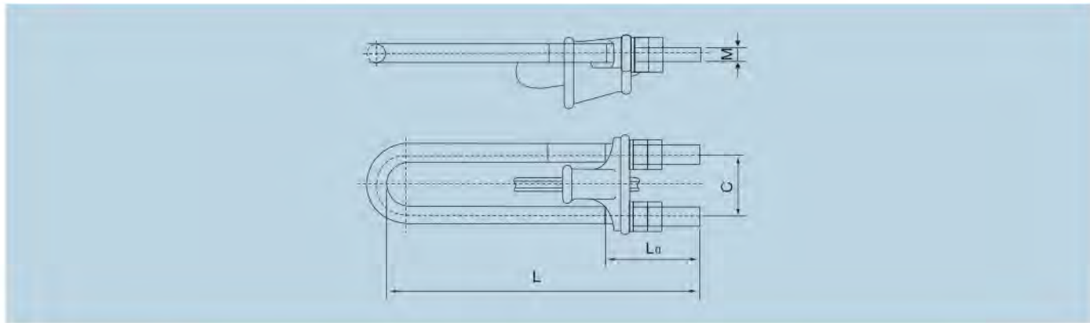

型号 Type	钢绞线外径(mm) Suitable dia of steel wire	主要尺寸 Dimensions(mm)				破坏荷重 Failure load (kN)	重量 Weight(kg)
		M	L	L0	C		
NU-3	13.0-14.0	22	290	60	74	143	4.2
NU-4	15.0-16.0	24	340	70	82	164	7.3

线夹的本体和楔子为可锻铸铁，其余为钢制件，全部热镀锌。如需防盗，可另购防盗装置。
Clamp body and wedge are cast iron, others are steel, all are hot galvanizing. If theft-proof, you can order theft-proof mount.

UL型挂环
UL TYPE HACKLES

型号 Type	主要尺寸 Dimensions(mm)						破坏荷重 Failure load (kN)	重量 Weight(kg)
	C	M	D	L	r	R		
UL-7	20	16	16	120	15	22	70	0.7
UL-10	22	18	18	140	17	24	100	0.9
UL-16	26	24	22	140	19	32	160	1.6
UL-20	30	27	24	160	22	36	200	2.9

除闭口销为不锈钢制件外，其余为热镀锌钢制件。
Besides closed catch is stainless steel,others are hot-dip galvanized steel.

JK型钢线卡子
JK TYPE STEEL WIRE CLIP

型号 Type	钢绞线外径(mm) Suitble dia of steel wire	主要尺寸 Dimensions(mm)				重量 Weight(kg)
		M	L	S	r	
JK-1	6.6-7.8	10	54	22	5	0.2
JK-2	9.0-11.0	10	72	28	6	0.3

本体为可锻铸铁，其余为钢制件，全部热镀锌。
The body is cast iron, others are steel, all are hot galvanizing.

LV型双拉线用联板
LV TYPE TOKE PLATE FOR DOUBLE STAY

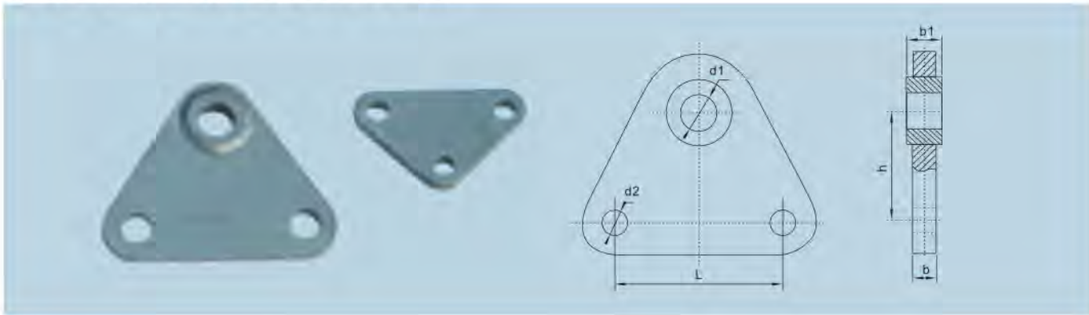

型号 Type	主要尺寸 Dimensions(mm)						破坏荷重 Failure load (kN)	重量 Weight(kg)
	b	b1	h	d1	d2	L		
LV-0712	16	16	60	18	20	120	70	1.5
LV-1020	16	16	60	20	20	205	100	1.6
LV-1214	16	16	90	24	20	140	120	2.4
LV-1612	18	18	100	26	26	120	160	3.2
LV-2015	16	26	100	30	20	150	200	2.5
LV-3018	18	32	120	39	26	180	300	5.9
LV-5020S	26	42	130	45	30	200	300	9.0
LV-5020	30	40	130	45	33	200	500	9.5

热镀锌钢制件。
Hot-dip galvanized steel.

PD型挂板
PD TYPE CLEVIES

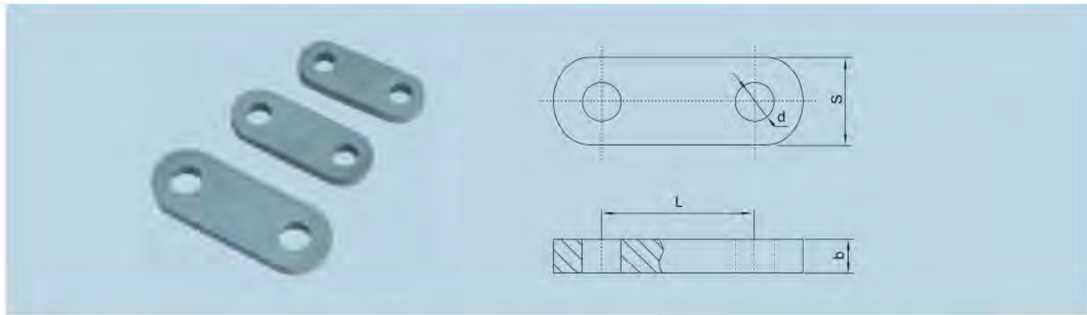

型号 Type	主要尺寸 Dimensions(mm)				破坏荷重 Failure load (kN)	重量 Weight(kg)
	b	d	L	s		
PD-7	16	18	70	40	70	0.5
PD-10	16	20	80	40	100	0.7
PD-12	16	24	100	40	120	0.9
PD-16	18	26	130	60	160	1.4
PD-3012	32	39	120	80	300	3.9
PD-50	38	45	130	110	500	7.0

热镀锌钢制件。
Hot-dip galvanized steel.

压接式NLY型线夹(可调式)
COMPRESSION JOINT-NLY TYPE CONNECTOR (ADJUSTABLE)

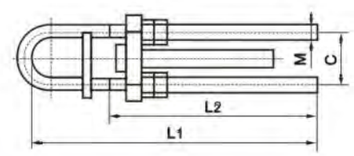

型号 Type	适用导线 Suitable conductor	主要尺寸 Dimensions(mm)				破坏荷重 Failure load (kN)	重量 Weight(kg)
		C	M	L1	L2		
NLY-50	1×7-9.0-140-GB1200-75	72	18	320	230	67.5	3.4
NLY-120	1×19-14.0-155-GB1200-75	94	24	580	400	196.0	7.9
NLY-135	1×19-15.0-155-GB1200-75	94	24	580	400	196.0	8.4
NLY-150	1×19-16.0-155-GB1200-75	104	24	580	400	245.0	12.2
NLY-165	1×37-16.8-155-GB1200-75	104	27	588	400	255.0	12.5
NLY-180	1×37-17.5-155-GB1200-75	114	30	640	450	300.0	13.6
NLY-195	1×37-18.2-155-GB1200-75	114	30	640	460	300.0	14.5
NLY-265	1×37-21.0-1570-GB1200-75	128	36	670	440	367.0	26.6
NLY-100E	1×19-13.0-1570-GB1200-88	84	22	490	300	151.0	6.3
NLY-125E	1×19-14.5-1570-GB1200-88	94	23	580	380	188.0	9.1
NLY-150E	1×19-16.0-1570-GB1200-88	104	27	610	400	228.0	12.0
NLY-180E	1×19-17.5-1570-GB1200-88	114	30	640	420	273.0	15.6
NLY-240E	1×19-20.0-1570-GB1200-88	128	36	670	440	357.0	22.6

热镀锌钢制件。如需防盗，可另购防盗装置。
Hot-dip galvanized steel. If need theft-proof, you can order theft-proof mount.

钢芯铝绞线(LGJ、LGJF)的结构与技术指标GB1179-83

STRUCTURE AND TECHNICAL INDEX FOR ACSR (LGJ, LGJF)

标称截面 铝/钢(mm^2)	结构根数/直径(mm)		计算截面(mm^2)			外径 (mm)	直流电阻不大于 (欧姆/公里)	计算拉断力(N)	计算重量 (公斤/公量)	交货长度 不小于(m)
	铝	钢	铝	钢	总计					
10/2	6/1.50	1/1.50	10.60	1.77	12.37	4.50	2.706	4120	42.9	3000
16/3	6/1.85	1/1.85	16.13	2.69	18.82	5.55	1.779	6130	65.2	3000
25/4	6/2.32	1/2.32	25.36	4.23	29.59	6.96	1.131	9290	102.6	3000
35/6	6/2.72	1/2.72	34.86	5.81	40.67	8.16	0.8230	12630	141.0	3000
50/8	6/3.20	1/3.20	48.25	8.04	56.29	9.60	0.5946	16870	195.1	2000
50/30	12/2.32	7/2.32	50.73	29.59	80.32	11.60	0.5692	42620	3720	3000
70/10	6/3.80	1/3.80	68.05	11.34	79.39	11.40	0.4217	23390	275.2	2000
70/40	12/2.72	7/2.72	69.73	40.67	110.40	13.60	0.4141	58300	511.3	2000
95/15	26/2.15	7/1.67	94.39	15.33	109.72	13.61	0.3058	35000	380.8	2000
95/20	7/1.85	7/1.85	95.14	18.82	113.96	13.87	0.3019	37200	408.9	2000
95/55	12/3.20	7/3.20	96.51	56.30	152.81	16.00	0.2992	78110	707.7	2000
120/7	18/2.90	1/2.90	118.89	6.61	125.50	14.50	0.2422	27570	379.0	2000
120/20	26/2.38	7/1.85	115.67	18.82	134.49	15.07	0.2496	41000	466.8	2000
120/25	7/4.72	7/2.10	122.48	24.25	149.73	15.74	0.2345	47880	526.6	2000
120/70	12/3.60	7/3.60	122.15	71.25	193.40	18.00	0.2364	98370	895.6	2000
150/8	18/3.20	1/3.20	144.76	8.04	152.80	16.00	0.1989	32860	461.4	2000
150/20	24/2.78	7/1.85	145.68	18.82	164.50	16.67	0.1980	46630	549.4	2000
150/25	26/2.70	7/2.10	148.86	24.25	173.11	17.10	0.1939	54110	601.0	2000
150/35	30/2.50	7/2.50	147.26	34.36	181.62	17.50	0.1962	65020	676.2	2000
185/10	18/3.60	1/3.60	183.22	10.18	193.40	18.00	0.1572	40880	584.0	2000
185/25	24/3.15	7/2.10	187.01	24.25	211.29	18.90	0.1542	59420	706.1	2000
185/30	26/2.98	7/2.32	181.34	25.59	201.93	18.88	0.1592	64320	732.6	2000
185/45	30/2.80	7/2.80	184.73	43.10	227.83	19.60	0.1564	80190	848.2	2000
210/10	18/3.80	1/3.80	204.14	11.34	215.48	19.00	0.1411	45140	650.7	2000
210/25	24/3.33	7/2.22	209.02	27.10	236.12	19.98	0.1380	65990	789.1	2000
210/35	26/3.22	7/2.50	211.73	34.36	246.09	20.38	0.1363	74250	853.9	2000
210/50	30/2.98	7/2.98	209.24	48.82	258.06	20.86	0.1381	90830	960.8	2000
240/30	24/3.60	7/2.40	244.29	31.67	275.96	21.60	0.1181	75620	922.2	2000
240/40	26/3.42	7/2.66	238.85	38.90	277.75	21.66	0.1209	83370	964.3	2000
240/55	30/3.20	7/3.20	241.27	56.30	297.57	22.40	0.1198	102100	1108	2000
300/15	42/3.00	7/1.67	296.88	15.33	312.21	23.01	0.09724	68060	939.8	2000
300/20	45/2.93	7/1.95	303.42	20.91	324.33	23.43	0.09520	75680	1102	2000
300/25	48/2.85	7/2.22	306.21	27.10	333.31	23.76	0.09433	83410	1058	2000
300/40	24/3.99	7/2.66	300.09	38.90	338.99	23.94	0.09614	92220	1133	2000
300/50	26/3.83	7/2.98	299.54	48.82	348.36	24.26	0.09636	103400	1210	2000
300/70	30.360	7/3.60	305.36	71.25	376.61	25.20	0.9463	128000	1402	2000
400/20	42/3.51	7/1.95	406.40	20.91	427.31	26.90	0.07104	88850	1286	1500
400/25	45/3.33	7/2.22	391.91	27.10	419.01	26.64	0.07370	95940	1295	1500
400/35	48/3.22	7/2.50	390.88	34.36	425.24	26.82	0.07389	103900	1349	1500
400/50	54/3.07	7/3.07	399.73	51.82	451.55	27.63	0.07232	123400	1511	1500
400/65	26/4.42	7/3.44	398.94	65.06	464.00	28.00	0.07236	135200	1611	1500
400/95	30/4.16	19/2.50	407.75	93.27	501.02	29.14	0.07087	171300	1860	1500
500/35	45/3.75	7/2.50	497.01	34.36	531.37	30.00	0.05812	119500	1642	1500
500/45	48/3.60	7/2.80	488.58	43.10	531.68	30.00	0.05912	128100	1688	1500
500/65	54/3.44	7/3.44	501.88	65.06	566.94	30.96	0.05760	154000	1897	1500
630/45	45/4.20	7/2.80	623.45	43.10	666.55	33.60	0.04633	148700	2060	1200
630/55	48/4.12	7/3.20	639.92	56.30	696.22	34.32	0.04514	164400	2209	1200
630/80	54/3.87	19/2.32	635.19	80.32	715.51	34.82	0..04551	192900	2388	1200
800/55	45/4.80	7/3.20	814.30	56.30	870.60	38.40	0.03547	191500	2690	1000
800/70	48/4.63	7/3.60	808.15	71.25	879.40	8.58	0.03574	207000	2791	1000
800/100	54/4.33	19/2.60	795.17	100.88	896.05	38.98	0.03635	241100	2991	1000

镀锌钢绞线的结构与技术指标

YB/T5004-2001 STRUCTURE AND TECHNICAL INDEX FOR GALVANIZED STEEL STRAND

结构	钢丝直径 (mm)	钢绞线直径 (mm)	钢绞线断面积 (mm^2)	公称抗拉强度(N/mm^2)					参考重量 (kg/100m)
				1175	1270	1370	1470	1570	
				钢丝破断拉力总和，kN不小于					
1×3	2.90	6.2	19.82	23.29	25.17	27.15	29.14	31.12	15.99
	3.20	6.4	24.13	28.35	30.65	33.06	35.47	37.88	19.47
	3.50	7.5	28.86	33.91	36.65	39.54	42.43	45.31	23.29
	4.00	8.6	37.70	44.30	47.88	51.65	55.42	59.19	30.42
1×7	1.00	3.0	5.50	6.46	6.98	7.54	8.08	8.64	4.37
	1.20	3.6	7.92	9.31	10.06	10.85	11.64	12.43	6.29
	1.40	4.2	10.78	12.67	13.69	14.77	15.85	16.92	8.56
	1.60	4.8	14.07	16.53	17.87	19.28	20.68	22.09	11.17
	1.80	5.4	17.81	20.93	22.62	24.40	26.18	27.96	14.14
	2.00	6.0	21.99	25.84	29.73	30.13	32.32	34.52	17.46
	2.30	6.9	29.08	34.17	36.93	39.84	42.75	45.66	23.09
	2.60	7.8	37.17	43.60	47.20	50.92	54.63	58.35	29.51
	2.90	8.7	46.24	54.33	58.72	63.35	67.97	72.60	36.71
	3.20	9.6	56.30	66.15	71.50	77.13	82.76	88.39	44.70
	3.50	10.5	67.35	79.14	85.85	92.27	99.00	105.74	53.48
	3.80	11.4	79.39	93.28	100.82	108.76	116.70	124.64	63.04
	4.00	12.0	87.96	103.35	111.71	120.50	129.30	138.10	69.84
1×19	1.60	8.0	38.20	44.88	48.51	52.33	56.15	59.97	30.40
	1.80	9.0	48.35	56.81	61.40	66.24	71.07	75.91	38.49
	2.00	10.0	59.69	70.14	75.81	81.78	87.74	93.71	47.51
	2.30	11.5	78.94	92.75	100.25	108.15	116.04	123.94	62.84
	2.60	13.0	100.88	118.53	128.12	138.20	148.29	158.38	80.30
	2.90	14.5	125.50	147.46	159.38	171.93	184.48	197.03	99.90
	3.20	16.0	152.81	179.55	194.06	209.35	224.63	239.91	121.64
	3.50	17.5	182.80	214.79	232.16	250.44	268.72	287.00	145.51
	4.00	20.0	238.76	280.54	303.23	327.10	350.98	374.86	190.05

镀锌钢绞线(GJ)的结构与技术指标GB1200-75

STRUCTURE AND TECHNICAL INDEX FOR GALVANIZED STEEL STRAND (GJ)

直径(mm)		全部钢丝断面积 (mm^2)	参考重量 (公斤/100m)	公称抗拉强度(N/mm^2)				
钢绞线	钢丝/根数			110	125	140	155	170
				钢丝破断拉力总和，kN不小于				
8.4	2.8/7	43.08	36.86	4730	5380	6030	6670	---
9.0	3.0/7	49.46	42.37	5440	6180	6920	7660	---
9.6	3.2/7	56.27	48.18	6180	7030	7870	---	---
10.58	3.6/7	67.31	57.65	7400	8410	---	---	---
11.4	3.8/7	79.35	67.96	8730	9910	---	---	---
12.0	4.0/7	87.92	75.33	9670	10990	---	---	---
5.0	1.0/19	14.92	75.33	1640	1860	2080	2310	2530
5.5	1.1/19	18.05	15.37	1980	2250	2520	2790	3060
6.0	1.2/19	21.48	18.29	2360	2680	3000	3320	3650
6.5	1.3/19	25.21	21.47	2770	3150	3520	3900	4280
7.0	1.4/19	29.23	24.92	3210	3560	4090	4530	4960
9.0	1.8/19	48.32	41.11	5310	6040	6760	7480	8210
10.0	2.0/19	59.66	50.82	6560	7450	8350	9240	10100
11.0	2.2/19	72.19	61.50	7940	9020	10100	11150	12250
12.0	2.4/19	85.19	73.15	9450	10730	12000	13300	14600
12.5	2.5/19	93.22	79.45	10250	11650	13050	14440	15840
13.0	2.6/19	100.83	85.94	11050	12600	14100	15600	17100
14.0	2.8/19	116.93	99.50	12850	14610	16350	18100	---
15.0	3.0/19	134.24	114.40	14750	16780	18750	20800	---
7.0	1.0/37	29.05	24.60	3190	3630	4060	4500	4930
7.7	1.1/37	35.14	29.75	3860	4390	4910	5440	5970
9.1	1.3/37	49.08	41.53	5390	6130	6870	7600	8340
9.8	1.4/37	56.93	48.17	6260	7110	7970	8820	9670
12.6	1.8/37	94.11	79.39	10350	11760	13150	14580	15950
14.0	2.0/37	116.18	98.10	12750	14520	16250	18000	19750
15.5	2.2/37	140.58	118.70	15450	18970	19650	21750	23850
16.8	2.4/37	167.30	141.10	18400	20910	23400	25930	28400
17.5	2.5/37	181.53	152.90	19950	22690	25400	28130	30860
18.2	2.6/37	196.34	165.80	21550	24540	27450	30430	33350

LH_BGJF_1、LH_BGJF_2、LH_BGJ钢芯热处理铝镁硅稀土合金绞线的结构与技术指标

STRUCTURE AND TECHNICAL INDEX FOR STRUCTURE AND TECHNICAL INDEX FOR STEEL CORE HEAT TREAT FOR AL MG SI ALLOY STRAND

标称截面 (mm^2)	结构根数/直径 (mm)		外径 (mm)	计算重量(Kg/km)			计算拉断力 (kN)	20℃直流电阻不大于 (Ω/km)	交货长度不小于 (m)
				型号					
	铝合金	钢		LH_BGJ	LH_BGJF_1	LH_BGJF_2			
50/8	6/3.20	1/3.20	9.60	194.8	194.7	194.8	23.05	0.68999	2000
70/10	6/3.80	1/3.80	11.40	274.7	274.7	274.7	32.51	0.48930	2000
70/40	12/2.72	7/2.72	13.60	510.1	520.6	525.9	66.78	0.48058	2000
95/55	12/3.20	7/3.20	16.00	706.0	720.6	728.0	90.46	0.34722	2000
120/7	18/2.90	1/2.90	14.50	378.5	378.5	396.7	42.47	0.28114	2000
120/70	12/3.60	7/3.60	18.00	893.6	912.0	921.3	114.50	0.27435	2000
150/8	18/3.20	1/3.20	16.00	460.9	460.9	483.0	51.43	0.23090	2000
150/25	26/2.70	7/2.10	17.10	600.1	606.4	632.7	72.18	0.22515	2000
185/10	18/3.60	1/3.60	18.00	583.3	583.3	611.3	69.09	0.18244	2000
185/30	26/2.98	7/2.32	18.88	731.5	739.1	771.3	86.98	0.18483	2000
210/10	18/3.80	1/3.80	19.00	649.9	649.9	681.1	72.52	0.16374	2000
210/35	26/3.22	7/2.50	20.38	852.5	861.5	898.7	101.35	0.15830	2000
240/30	24/3.60	7/2.40	21.60	921.0	929.2	971.3	107.85	0.13712	2000
240/40	26/3.42	7/2.66	21.66	962.9	972.9	1015.2	114.48	0.14033	2000
300/20	45/2.93	7/1.92	23.43	1001.0	1006.4	1071.3	113.70	0.11054	2000
300/50	26/3.83	7/2.98	24.26	1207.9	1220.5	1273.5	143.62	0.11189	2000
300/70	30/3.60	7/3.60	25.20	1400.0	1418.4	1474.7	168.36	0.10987	2000
400/25	45/3.33	7/2.22	26.64	1293.7	1300.7	1384.9	146.97	0.08558	1500
400/50	54/3.07	7/3.07	27.63	1509.6	1522.9	1611.6	174.67	0.08599	1500
400/95	30/4.16	19/2.50	29.14	1857.4	1884.1	1959.6	226.01	0.08228	1500
500/35	45/3.75	7/2.50	30.00	1640.6	1649.5	1756.2	185.22	0.06748	1500
500/65	54/3.44	7/3.44	30.96	1895.4	1912.2	2023.5	219.31	0.06689	1500
630/45	45/4.20	7/2.80	33.60	2058.0	2069.2	2203.0	232.34	0.05379	1200
630/80	54/3.87	19/2.32	34.82	2385.2	2408.2	2548.8	278.14	0.05285	1200
800/55	45/4.80	7/3.20	38.40	2688.1	2702.6	2877.5	301.50	0.04118	1000
800/100	54/4.33	19/2.60	38.98	2988.5	3017.4	3194.1	348.57	0.04222	1000
1000/45	72/4.21	7/2.80	42.08	3105.9	3117.1	3353.3	343.71	0.03348	1000
1000/125	54/4.84	19/2.90	43.54	3729.8	3765.7	3985.2	434.91	03370.9	1000

NLL 系列螺栓型铝合金耐张线夹及绝缘罩(适用20KV及以下绝缘导线)

NLL Series aluminium alloy strain clamp and insulation cover(bolted type)

用途 Application:

NLL系列螺栓型铝合金耐张线夹适用于10KV及以下架空线路中，在耐张杆上固定铝绞线或钢芯铝绞线，用于架空绝缘铝导线时和绝缘罩配套使用，起绝缘防护作用。

NXL series aluminium alloy strain clamp(Bolt type)is suitable for aerial line up to 10KV, fixing aluminium wire or steel core aluminium wire on the strain pole, aerial insulation aluminium conductor and insulation aluminium cover are being used together, It's action is insulation protection.

结构特点 Structure feature:

- 夹体用高强度铝合金制造；
- 外表光洁，使用寿命长；
- 安装使用方便；
- 无电能损耗，是节能认证产品。
- The body is made of high-strength aluminium alloy.
- Smooth surface long servile lfie.
- Easy installation.
- No waste electric energy.

绝缘罩性能特点 Insulation cover performance feature:

- 工频耐压：≥18KV 保压1分钟不击穿；
- 绝缘电阻：$>1.0\times10^{14}\Omega$；
- 环境温度：-30℃～90℃;
- 耐气候性能：经人工气候老化试验1008小时后性能良好。
- Withstand voltage：≥18KV keep voltage one minute
- noe breakdown.
- Insulation resistance：$>1.0\times10^{14}\Omega$.
- Environments temperature：-30℃～90℃.
- Weather proof performance：have good performanced after 1008 hours artifical climate aging test.

NLL-1 NLL-2 NLL-3 NLL-4 NLL-5 NLL-5L

HD-190

HD-230

HD-285

HD-320

NLL系列绝缘罩
NLL Series insulation cover

规格及技术参数 Specification:

型号 Type	适用导线 Conductor	适用绝缘导线 Conductor(mm²)		U型螺丝 U bolt		破坏负荷 Failure load (KN)
		1KV	10KV	个数	直径	
NLL-1	5.0～10.0	25～70	10～25	2	M12	40
NLL-2	10.0～14.0	50～120	25～50	2	M12	40
NLL-3	14.0～18.0	120～240	70～120	3	M14	70
NLL-4	18.0～23.0	185～300	150～240	3	M14	90
NLL-5	23.0～29.0	/	300	5	M16	100

规格及技术参数 Specification:

型号 Type	夹线范围 Clip range (mm)	U型螺丝 U bolt		破坏负荷 Failure load (KN)
		个数	直径	
HD-190	Φ7.6～16.2	2	M12	40
HD-230	Φ8.5～19.6	2	M12	40
HD-285	Φ11.4～22.6	2	M12	70
HD-320	Φ13.0～26.4	3	M12	70
HD-350	Φ 13.0～28. 6	3	M14	70

JCT 系列C形线夹及绝缘罩

JCT Series Ctype clamp

用途 Application:

JCT 系列C形线夹为非承受力型电力连接金具，适用于导线的连接、跳线、“T”接及变压器引下线。线夹的适用电压等级：380V、10KV、35KV、110KV、220KV，可以用于铝线对铝线、铜线对铜线、铜线对铝线、铁线对铁线的连接。

JCT Series Ctype clamp for must receives the strength electric power connection fitting,is suitable in the wire connection,jumps the line,

JCT 系列线夹 JCT Series clamp

绝缘罩性能特点

- 材料：采用10KV电缆阻燃绝缘料
- 适用：绝缘导线，塑料导线
- 颜色：黑色
- 电压等级：380V、10KV
- 技术参数：拉伸强度≥20MPa，断裂伸长率≤650
  体积电阻率$\leq1\times10^{14}\Omega$.cm，击穿强度≤35KV/mm
  耐漏电痕迹≤3.5KV

- Material: Uses the 10KVelectric cablebeing flame-resistant insulating compound
- To be suitable: Insulated conductor, plastic wire
- Colour: Black
- Voltage rank: 380V, 10KV
- Technical parameter: Longitudinal strength<20MPa;Break elongation ratio<650
  Volume resistivity $1\times1014\Omega$.cm;Disruptive strength ≤35KV/mm
  Bears the tracking ≤3.5KV

结构特点 Structure feature:

- “C”形线夹所具有的弹性，能长期保持导线与线夹间恒定的接触压力，恒定而足够大的接触压力，最大化的接触面能长期保持非常低的接触电阻，过流能力强，减少损失；
- 独特的结构，保证两侧导线（不同线径）压力均衡，大小线跳渡；
- 长期稳定良好的接触性能：免维护、免检修，减少维护费用，增强可靠性；
- 科学先进的施力块结构，大大减轻劳动强度，提高工作效率；作用力与压力不同方向，安装时大大减少人为因素的影响；
- 特殊的铝合金材质，涂有抗腐蚀，抗氧化，憎水性和导电性能很强的电力复合脂，能使不同材质的导线接触良好。
- 在安装和拆卸中完全不损伤导线；能多次重复使用；与导线同寿命；
- 最安全，无危险性爆炸物品；最牢固，有螺栓紧固，绝对不会自然调出。
- “C”type the shape pary has the elasticity,can between the long-term maintenance wire and insulating clamp the constant contact pressure, constant and the enough big contact pressure,the maximized contact face can the longterm maintenance extremely low contact resistance,overflow ability,reduces the loss;
- Unique structure, keep the both sides wire (different line dia.) pressure balance and big string cable jumps crosses;
- Long-term stability good contact performance: Exempts the maintenance, exempts the overhaul, reduces the maintenance cost, the enhancement reliability;
- The science advanced application of force block structure, reduces the labor intensity greatly, enhances the work efficiency; The action and the pressure different direction, install when big reduced human factor influence;
- The special aluminum alloy material quality, spreads has the corrosion resistance, the oxidation resistance, the hatred river character and the electric conductivity very strong electric power compound fat, can cause the different material quality the wire contact to be good.
- Do not damage the wire completely in the installment and the disassemblage; Can duplicate many times uses; and with wire same life;
- Safest, non-risk esplosive decice; Most reliable, has the bolt to be tight, cannot fall naturally absplutely.

安装步骤

- 确定型号：使用前先核对导线与线夹的型号相配套，如型号JCT-34表示钢芯铝绞线240/95或铝绞线240/150的连接（如图1）；
- 安装线夹主线与分支线：线夹线槽大小不同，安装时须将大弧面压块对准主线槽（如图2）安装好主线后，将小弧面的压块对准分支线槽进行安装（如图3）；
- 确认螺栓位置：安装好主线与分支线后，使螺栓位于压块顶部的中间位，用扳手拧紧螺栓（如图4，5）；
- 确定安装完毕：拧紧螺栓时，把压块压平，并确保导线与线夹的紧固度，并使线夹应有微微变形（如图6）；
- Definite model: Before the use checks the wire and the insulating clamp model first forms a complete set, like model JCT-34 expresses the steel core aluminum twisted wire 240/95 or the aluminum twisted wire 240/150 connection (e.g. Figure 1);
- Installs the insulating clamp the master line and the branch line: The insulating clamp trunking size is different, installs when must aim the big cambered surface briquetting the host trunking (e.g. Figure 2), after installs the good master line, carries on the small cambered surface briquetting alignment branch trunking the installment (e.g. Figure 3);
- Confirms the bolt position: After installs the master line and the branch line, causes the bolt to be located the briquetting crown the sandwich digit, screws tight the bolt with the spanner (e.g. Figure 4,5);
- The determination installment finished: When screws tight the bolt, presses evenly the briquetting, and guarantees the wire and insulating clamp tautness, and causes the insulating clamp to be supposed to have the slightly distortion (e.g. Figure 6);

1

2

3

7

6

5

4

用于紧压型绝缘铝绞线

导线规格	JKLYJ-50	JKLYJ-70	JKLYJ-95	JKLYJ-120	JKLYJ-150	JKLYJ-185	JKLYJ-240
直径(mm)	8.3	10	11.6	13	14.6	16.2	18.4
JKLYJ-35	JCT-71	JCT-71	JCT-62	JCT-61	JCT-52	JCT-52	JCT-44
JKLYJ-50	JCT-71	JCT-62	JCT-61	JCT-52	JCT-52	JCT-44	JCT-44
JKLYJ-70		JCT-61	JCT-52	JCT-51	JCT-47	JCT-44	JCT-43
JKLYJ-95			JCT-51	JCT-47	JCT-47	JCT-44	JCT-43
JKLYJ-120				JCT-47	JCT-47	JCT-43	JCT-42
JKLYJ-150					JCT-46	JCT-42	JCT-42
JKLYJ-185						JCT-42	JCT-42
JKLYJ-240							JCT-33
LGJ-50/8	JCT-71	JCT-61	JCT-52	JCT-52	JCT-51	JCT-44	JCT-44
LGJ-70/10	JCT-61	JCT-52	JCT-51	JCT-47	JCT-47	JCT-44	JCT-43
LGJ-95/15	JCT-52	JCT-51	JCT-47	JCT-47	JCT-46	JCT-43	JCT-42
LGJ-120/20	JCT-51	JCT-47	JCT-47	JCT-46	JCT-46	JCT-42	JCT-42
LGJ-150/20	JCT-47	JCT-47	JCT-46	JCT-46	JCT-46	JCT-42	JCT-41
LGJ-185/25	JCT-44	JCT-43	JCT-42	JCT-42	JCT-42	JCT-41	JCT-34
LGJ-240/30	JCT-36	JCT-35	JCT-35	JCT-34	JCT-34	JCT-33	JCT-32

JXT 系列楔形线夹及绝缘罩

JXL Series stram clamp and insulation cover(wedge type)

JXL 楔型线夹
JXL series clamp(wedge type)

JXL 楔型线夹绝缘罩
JXL series clamp and insulation cover (wedge type)

用途 Application:

JXL系列楔型线夹适用架空配电线路中导线的非承力接续，适用于架空绝缘铝绞线和钢芯铝绞线，绝缘罩和线夹配套使用，起绝缘防护作用。

JXL series clamp(wedge type)i s suitable for unendre force splicing of conductor on the aerial distribution，also used for aliminium wire or aerial insulation aluminium core wire，insulation cover and clamp are used together. It's action is insulation protection.

结构特点 Structure feature:

C型件的弹性作用与导线形成“共呼吸”的关系
The flexible C form part is in an interdependent relationship with the lead

安装完成缠上绝缘自溶胶带
By winding the insulating and autolytic tape after installation

螺栓保持恒定拉力可起到保险定位作用
The bolt can produce a constant pull force and serve as a safety and oriention bar

采用特殊电力导电膏．既增大了与导线的接触面积，又可防止线夹的氧化和锈蚀
The application of special electric power conductive paste can not only increase the contact area but also prevent the clamps against ovidation and rusting

1、产品的独特设计及线沟内涂有抗氧导电盲，大大提高了线夹的过载能力和热循环能力，可有效地降低线损节能增效，并使因线夹接触不良而引发的线路故障率降至“零”；
2、操作非常简单大大降低施工劳动强度；
3、翻定扭断力螺杆保证所有产品安装品质相同，完全避免了安装中人为因素对安装质量的影响；
4、C形件的弹性作用。可以补偿导线的应力松弛，使线夹在任何环境中与导线都形成有机的整体；
5、螺杆在安装到位后保持恒定拉力可起到保险定位作用；
6、使用本产品能提升整个线路的运行质量。

1、Its unique design features and the application of anti-oxidanl conductive paste within the cable channel can significantly improve the ability for overloading and heat cycle. remarkably decrease the line loss and increase the energy conservation and efficiency, and reduce to “zero” the1ine failure rate caused by the bad contact of clamps;
2、It's very simple to operate. thus bringing an enormous reduction in the construction and labor intensity;
3、The rated anti-torsion bolt can guarantee the uniform installation quality for all products and remove all the adverse influence due to human; factors on the installation quality;
4、The flexibility of C form parts can supplement the stress looseness of wires. making clips and wires an integrated combination under any;
5、Circumstance.Ti1e installed bolts can maintain the constant tension to safeguard the fixed position;
6、Using this Produet can enhance the oorating quality of the whole line.

JXL 系列楔形线夹安装及选用表

JXL Series wedge type clamps of installation and selection list

安装说明 Installation explain

1、剥离绝缘导线绝缘层, 剥离长度应大于线夹长度5厘米,将C形元件和分接线一起挂在主线上, 将楔块用力插入两导线之间.

2、将专用螺栓插入C型元件预留孔与楔块的螺纹孔相连，用套筒扳手拧紧螺栓直到第一个螺帽自行断落。

3、将线夹和绝缘导线多剥离部分用绝缘自粘带缠绕好，或使用线夹罩将线夹保护起来。

1、Skin the insulation material of wires with a length 5 cm more than that of wire clip, and hang C form parts and splitting wire on the main cable, and then insert the wedge between the two wire with force.

2、Insert special bolt into the preset hole of C form parts, where the bolt will be fixed into the threaded hole of wedge, then screwthe bolt on with a socket spanner until the first nut drops.

3、Use insulation tape to wrap the over-skinned sections of clips and wires, or protect the wire clips with clip covers.

JXL型线夹 选用表 Selection list

导线规格直径 mm	LJ-16 5.0-5.5	LJ-25 6.0-6.5	LJ-35 7.5-8.5	LJ-50 8.5-9.6	LJ-70 10.8-12.5	LJ-95 12.5-13.9	LJ-120 14.0-15.7	LJ-150 15.7-17.5	LJ-185 18-20	LJ-240 20-22
LJ16(5.0-5.5)	10101	10201	11101	11201	22101	22201	33101	33201	44101	44201
LJ25(6.0-6.5)		10202	11102	11202	22102	22202	33102	33202	44102	44202
LJ35(7.5-8.5)			11111	11211	22111	22211	33111	33211	44111	44211
LJ50(8.5-9.6)				11212	22112	22212	33112	33212	44112	44212
LJ70(10.8-12.5)					22121	22221	33121	33221	44121	44221
LJ95(12.5-13.9)						22222	33122	33222	44122	44222
LJ120(14.0-15.7)							33131	33231	44131	44231
LJ150(15.7-17.5)								33232	44132	44232
LJ185(18-20)									44141	44241
LJ240(20-22)										44242

导线规格直径 mm	LGJ-35/6 8.16	LGJ-50/8 9.60	LGJ-70/10,40		LGJ-95/15,20		LGJ-120/20,25		LGJ-150/20,25	
			11.40	13.60	13.60	13.87	15.07	15.74	16.67	17.10
LGJ-35/6	15508-45	15508-9	17509-9	17510-8	17510-9		28512-4		28512-8	
LGJ-50/8		17509-9	17510-8	18611-7	18611-7		28512-6		29513-3	
LGJ-70/10			18611-7	27712-9	17612-6		28613-5		29614-2	
LGJ-70/40				27712-9	27712-8		28714-7		29815-4	
LGJ-95/15,20					28714-2		28714-7		29815-4	
LGJ-120/20,25							28715-3		29816-1	
LGJ-95/55							28715-7		29816-3	
LGJ-150/20,25									29917-0	
LJ16-5.1	15406-6	15507-25	16408-2	17409-4	17409-4		28410-4		29411-0	
LJ25-6.45	15507-25	15507-9	16408-9	18410-3	18410-3		28411-0		29511-7	
LJ35-7.5	15507-9	15508-45	16409-4	17510-8	17510-9		28411-5		29512-2	
LJ50-9	16508-6	16509-4	16510-2		18611-7		28512-6		29513-0	
LJ70-10.8	16509-4	17510-2	16611-0	18612-42	18612-42		28613-2		29614-2	
LJ95-12.12	17510-2	18610-8	18611-8		27712-9		28713-9		29714-6	
LJ120-14.25	18611-2	18511-9	18612-8	28714-2	28714-2		28714-9		29815-6	
LJ150-15.75	28511-9	28612-8	28713-6		28714-8		28815-7		28815-7	

*订货时，请说明产品是铝绞线还是钢芯铝绞线，主线及分支导线截面积。

JXT 系列楔形线夹及绝缘罩

JXL series stram clamp and insulation cover(wedge type)

用途 Application:

楔型线夹适用架空配电线路中架空绝缘铝绞线或钢芯铝绞线间的非承力接续或分支，绝缘罩和线夹配套使用，起绝缘防护作用。

JXL series clamp(wedge type)is suitable for unendre force splicing of conductor on the aerial distribution, also used for aluminium wire or aerial insulation aluminium core wire, insutation cover and clamp are used together It action is insulation protection.

结构特点 Structure feature:

- 非磁性材料，无电能损耗
- 楔块弹力夹紧，接续可靠
- 适于各种导线组合，适用性强
- No waste energy reliable splicing reliable splicing easy installing.Suitable for all kinds of conductor combination, highly suitable
- Reuse, long service life

线夹的选用 Application of wire clamp

楔型线夹由C型楔壳和 楔块两部分组成 (如下图所示)， C型楔壳和楔块间构成的沟槽 尺寸与所要安装的导线 直径有直接的关系。沟槽尺寸及形状由设计者和制造厂来确定。因此，选用楔型线夹时，用户只需同时提供主导线和支导线的型号和截面尺寸即可。楔型线夹选用见表1和表2

Wedge type wire clip is made up of C type wedge shell and wedge block(as shown in the following two pictures). The size of groove between C type wedge shell and wedge block is directly related to the diameter of conducting wire to be installed The size and shape of wedge is decided by the designer and manufacturer. Therefore, in choosing wedge type wire clip. the user may only offer the type and cross sectional size of main traverse and spur traverse. See table 1 and table 2 for the choice of wedge type wire clip

JXL 楔型线夹
JXL series clamp (wedge type)

JXL 楔型线夹绝缘罩
JXL series clamp and insulation cover (wedge type)

线夹的选用 Application of wire clamp

图1. 楔型线夹壳体分为1号、2号、3号、4号共四种，按线夹壳体大小选用安装工具。1号、2号壳体线夹选用小号安装工具，3号、4号壳体线夹选用大号安装工具。

图2. 我公司研究的智能安装工具，具有操作方便、使用可靠、安装效果良好等诸多优点，可供用户选用。

1.Shell of wedge type wire clip is divided into four types from 1# to 43# Choose proper installation tools according to wedge type shell number Small size installation tool may be used for wire clips of 1# and 2# shell Large size installation tool may be used for wire clips of 3# and4# shell Dimension of conducting line for 3# and 4# shell is 1 50-240 square millimeters.

2.The successfully developed hydraulic type installation tool produled hy our company is featured with many advantages such as portability, reliability and good installation effect and it can be at free choices for users.

图1：JXL 楔型线夹安装工具
JXL installation tools of wedge type

图2：JXL 楔型线夹智能安装工具
JXL Wedge insulating clamp intellingence the erecting tool

JXL 型线夹选用表-1 Sele table 1 for the choice of JXL type wire clip

主导线 / 支导线 / 线夹代号	LJ-16 5.10	LJ-25 6.45	LJ-35 7.50	LJ-50 9.00	LJ-70 10.80	LJ-95 12.12	LJ-120 14.25	LJ-150 15.75	LJ-185 17.70	LJ-210 18.80	LJ-240 20.00	LJ-300 22.40
LJ16-5.1	14405-1	14405-8	14406-3	15407-3	16408-3	17408-6	18409-7	28410-4	39411-3	31412-0	42412-6	42413-8
LJ25-6.45		14406-5	14407-0	15407-7	16408-9	17409-4	18410-4	28411-1	39412-0	31412-7	42413-2	42414-4
LJ35-7.5			14407-5	15408-3	16409-5	17410-0	18410-9	28411-6	39412-5	31413-2	42413-8	42415-0
LJ50-9				15509-0	16509-8	17510-9	18511-9	28512-6	39513-4	31514-2	42514-5	42515-6
LJ70-10.8					16611-1	17511-8	18612-8	28613-3	39614-3	31615-1	42615-7	42616-5
LJ95-12.12						17712-1	18713-2	28713-9	39714-8	31715-5	42716-1	42717-3
LJ120-14.25							18814-3	28815-0	39815-9	31816-6	42817-1	42818-3
LJ150-15.75								28815-8	39816-6	31817-3	42817-9	42819-1
LJ(TJ)-185									39917-5	31918-2	42919-1	42920-0
LJ(TJ)-210										31118-8	42219-4	42120-6
LJ(TJ)-240											42220-0	42221-2
LJ(TJ)-300												42222-4

JXL 型线夹选用表-2 Sele table 2 for the choice of JXL type wire clip

主导线 / 支导线 / 线夹代号	LGJ-35/6 8.16	LGJ-50/8 9.60	LGJ-70-10,40 11.40	LGJ-70-10,40 13.60	LGJ-95/15,20 13.60	LGJ-95/15,20 13.87	LGJ-120/20,25 15.07	LGJ-120/20,25 15.74	LGJ-150/20,25 16.67	LGJ-150/20,25 17.10	LGJ-185/25,30 18.90	LGJ-185/25,30 18.88	LGJ-240/30,40,55 21.6	LGJ-240/30,40,55 21.66
LGJ-35/6	15508-2	15509-0	16509-8	17510-9		17510-9	28411-6	28512-0	39412-5	39512-8	31513-5		42514-9	
LGJ-50/8		15509-6	16510-5	17511-6		17511-6	28512-6	28512-6	39513-4	39513-4	31514-2		42515-6	
LGJ-70/10			16611-4	17612-5		17612-5	28613-3	28613-6	39614-3	39614-3	31615-1		42616-5	
LGJ-70/40				17713-9		17713-9	28714-3	28714-8	39715-3	39715-3	31716-3		42717-7	
LGJ-95/15,20						17713-9	28714-8	28714-8	39715-3	39715-7	31716-3		42717-7	
LGJ-120/20							28815-0	28815-4	39815-9	39816-2	31817-3		42818-3	
LGJ-120/25								28815-8	39816-2	39816-6	31817-3		42818-7	
LGJ-150/20									39916-7	39916-9	31917-8		42919-1	
LGJ-150/25										39917-1	31918-2		42919-6	
LGJ-185/25,30											31118-8		42120-2	
LGJ-240/30,40,50													42221-6	
LJ16-5.1	15406-6	15407-3	16408-3	17409-4	17409-4	28410-4	28410-4	39410-9	39411-3	31412-0	42413-4			
LJ25-6.45	15407-3	15408-3	16408-9	17410-0	17410-0	28410-8	28411-1	39411-6	39412-0	31412-7	42414-0			
LJ35-7.5	15407-7	15408-6	16409-5	17410-7	17410-7	28411-6	28411-6	39412-0	39412-5	31413-2	42414-6			
LJ50-9	15508-6	15509-6	16510-5	17511-6	17511-6	28512-0	28512-6	39512-8	39513-4	31514-2	42515-6			
LJ70-10.8	16509-8	16510-5	16611-1	17612-5	17612-5	28612-9	28613-3	39613-7	3914-3	31615-1	42616-5			
LJ95-12.12	17510-1	17510-9	17611-8	17713-0	17713-0	28613-6	28713-9	39614-3	39714-8	31715-1	42716-9			
LJ120-14.25	18511-2	18511-9	18612-8	18714-1	18714-1	28815-0	28815-0	39715-7	39815-9	31816-6	42817-9			
LJ150-15.75	28512-0	28512-6	28613-6	28714-8	28714-8	28815-4	28815-8	39816-2	39816-6	31817-3	42818-7			
LJ(TJ)-185	39512-8	39513-4	39614-3	39715-7	39715-7	39816-2	39816-6	39917-1	39917-3	31918-2	42919-6			
LJ(TJ)-210	31513-5	31514-2	31615-1	31716-3	31716-3	31817-3	31817-3	31917-8	31918-2	31118-8	42120-2			
LJ(TJ)-240	42414-0	42514-9	42615-7	42716-8	42716-9	42817-5	42817-9	42918-6	42918-6	42119-4	42220-8			

注：线夹代号说明：如28613-3，代号第一个数字2表示为线夹的2#；代号第二个数字8表示为线夹楔块的大圆槽半径，代号后三个13-3表示主支导线半径之和。

客户订货时可注明主导线和支导线的型号规格，或按以上选型表确定线夹代号

FHJ型穿刺防弧金具(适用20KV及以下绝缘导线)

FHJ type piercing arc-protection fitting

性能特点 Structure feature

(一)安装简便：无需剥去导线的绝缘层，可直接安装，恒定的力矩螺母控制拧紧力矩，保证防弧金具与导线可靠的接触，并简化了安装的难度，外加绝缘罩保护．运行安全可靠；

(二)合理设计：精确设计的雷电放电间隙，能准确定位雷电冲击放电路径，疏导工频电弧远离架空绝缘导线和绝缘于，能有效的防止雷击断线，保证架空绝缘导线的安全运行；

(三)选材合理：高压电极采用高强度铝合金，能耐受多次电弧烧灼，螺栓锁紧采用高弹性碟型垫片，使线夹具有足够穿刺力的补偿，弥补绝缘导线长期运行而发生的蠕变问题。

1. Simple installation: install directly without peeling off insulating layer, screw the control moment nut tightly to contact with the wires well, then close it with a insulation shell to work sifaty.

2. Outstanding design: design a gap precise between hardware and arcing-plate to guide lightning passing through for separating power-frequency from overhead insulation line、insulators and preventing from breaking of overhead insulation line by lightning stroke.

3. Outstanding material: Being made of high strength aluminimn alloy, the high voltage electrodes callendure to be struck by electric arc for many times. The bolt with a high-elasticity dishing shim, support enough strength to hardware piercing, and resolves creep problem resulted from long term operating of insulating conductor.

主要技术参数 Main technical parameters

型 号 Type	适用 电压 Applicable voltage (KV)	分支 电缆截面 Section of branch cable (mm^2)	主要尺寸 Dimensions(mm)		
			A	B	H
FHJ- 70/120	10	70~120	128	75	132.5
FHJ- 150/240	10	150~240	128	75	132.5

FHJ系列穿刺型防弧线夹安装说明

型号规格 Model Specification	P15	P20
对应的距离D(毫米)	345±10	285±10
对应的距离D(毫米)	130~150	150~180

1、穿刺型防弧 金具适用于P15、P20型绝缘子，如遇其他型 号绝缘子配合使用时， 应与本公司联系。不同 标称截面积绝缘导线要选择对应型号的防弧金具。 产品必须 安装在绝缘子的负荷 (受电侧、 非电源侧)，防弧金具的烧 灼部位必须与导线平行， 并且垂直防止。根据 绝缘子的型号参照说明书测量 防弧金具到绝缘子中 心线的距离，要确保D和L的 距离满足下表安装尺寸的要求， 以便定位雷电闪络路径， 使工频电弧烧灼时不会 损伤架空绝缘导线和绝缘子。

2、安装防弧 金具部分时, 上压板和下压板必须上 下平行放置, 拧两枚力矩螺母, 使用的扳手应采用 封闭式的扳手(套筒扳手、梅花扳手，棘轮扳手等), 避免使用开口式的扳手 (活动扳手、 开口扳手等)。 另外，不同型号防弧金具 的锁紧力矩各不相同， 所以使用时请勿擅自调换力 矩螺栓。

3、在绝缘子底部安装引弧板，根据绝缘子的型号参照说明书调整防弧金具至引弧板的距离，确保D和L的距离满足安装尺寸的要求。

4、给防弧金具 的穿刺部分套上绝缘罩， 绝缘罩的扣钉和绝缘 绑线要求绑扎牢靠。

FHJL型裸导线防弧金具(1)

FHJL type piercing arc-protection fitting

用途 Application

裸导线用的防弧线夹适用于P1 5、P20、PSl 5型绝缘子，如遇其他型号绝缘子配合使用时，应与本公司联系。不同标称截面积的绝缘导线要选择对应型号 的防弧线夹。产品必须安装在绝缘子 的负荷侧 (受电侧、非电源侧)，防弧线夹的 烧灼部位必须与导线平行，并且垂直放置；建议每根电线杆安装一组裸导线用防弧线夹。根据绝缘子的型号参照说明书测量防弧线夹到绝缘子中心线的距离，要确保D和L的距离满足下表安装尺寸的要求，以便定位雷电闪络路径，使工频电弧烧灼时不会损伤架空裸导线和绝缘子。

The arc-protection connector for bar conductor is suitable for P15, P20 and PSl 5 type insulators, if it is nsed for other types of insulatons, please contact us. As for the insulating conductors of differcnt nominal sectionaI areas, please select the corresponding models of arc-protection connectors. The product must be installed on the load side (electricity receiving side and non-power supply side) of insulator, the burning part of arc-protection connector must be parallel with the conductor, and it must be laid vertically; it is suggested that each wire pole shouId be installed with a set of arc-protection connector for bar conductor. According to the model of insulator, please measure the distance from arc-protection connector to the centra l line of insulator by referring to the manual, D and L distabce myst meet the requirements of installation size as shown in following table, so that the l ightning flashover path is positioned, and the overhead bare conductor and insulator arc not damaged if the powcr-frequcncy arc corobustion happens.

主要技术参数 Main technical parameters

型 号 Type	适用 电压 Applicable voltage (KV)	分支 电缆截面 Section of branch cable (mm^2)	主要尺寸 Dimensions(mm)		
			A	B	H
FHJL -50/240	35	50~240	128	75	132.5

安装说明 Directions for installation

安装裸导线防弧金具部分时，上压板和下压板必须上下平行放置，拧两枚力矩螺母的时候要均匀交替的拧，最后直至拧断力矩螺母，使用的扳手应采用封闭式的扳手 (套筒扳手、梅花扳手、棘轮扳手等)，避免使用开口式的扳手(活动扳手、开口扳手等)。另外，不同型号防弧线夹的锁紧力矩各不相同，所以使用时请勿擅自调换力矩螺栓。

拧断力矩螺母后，把锁紧螺母拧上。

在绝缘子底部安装引弧板，根据绝缘子的型号参照说明书调整防弧线夹至引弧板的距离，不同的绝缘子配套的引弧板形状可能不一，订货时请告知被安装的绝缘子型号或外型尺寸，确保D和L的距离满足安装尺寸要求

When installing the arc-protection fitting for bar conductor, the upper pressing plate must be parallel with the lower pressing plate; two torque nuts must be tightened alternately, till they are twisted off, it is suggested the spanners should be the enclosed bnes (socket spanner, box spanner and ratchet spanner), not the open type ones (monkey spanner, opcn spanne r, etc.). In addition, the locking torques are different wlth the arc-protection connectors, therefore, user must not change the torque bolt without permission.

Aftcr twisting off the torque nut, please tighten the locking nut.

Install an run-on plate at the bottom of insulator, please adjust the distance from arc-protection connector to run -on plate wlth the methods given in manual aceording to the model of insulator, as for the different insulators, the shape of run -on plate may be different, when placing an order, please indicate the model or outline size of installed insulator, make sure D and L distances meet the requirement of installation

FHJL型裸导线防弧金具(2)

FHJL type piercing arc-protection fitting

安装尺寸要求 Sizerange

绝缘子型号 Model Specification	P15	P20	PS15/300	PS15/500
对 应的距离D(毫米) Corresponding distance D (mm)	345±10	285±10	285±10	285±10
对 应的距离L(毫米) Corresponding distance D (mm)	140±10	165±15	150±15	160±15

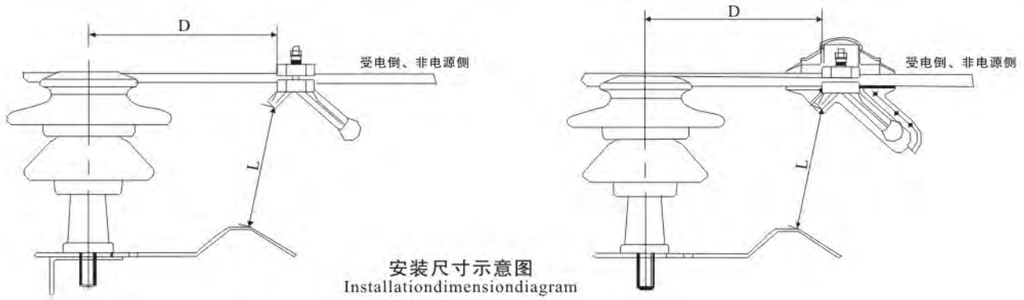

安装尺寸示意图
Installationdimensiondiagram

35KV线路安装实例 Example of 35KV circuit installation

HP-LP 新型线路绝缘子防雷过电压保护器

HP-LP new-type line insulator protector for lightning and over voltage protection

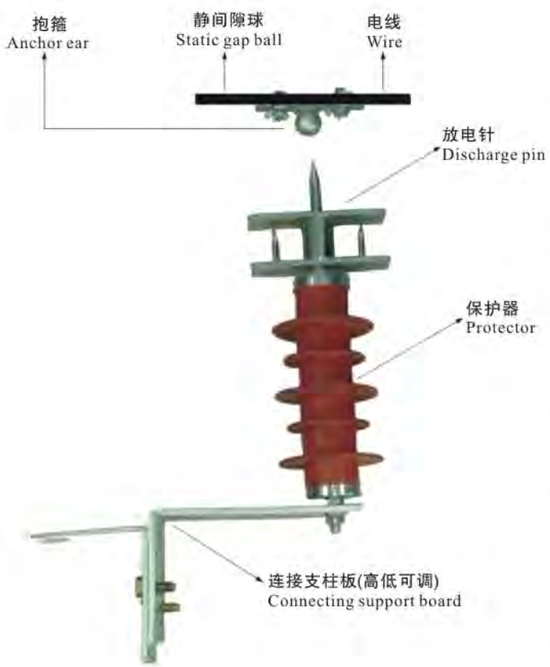

用途 Application:

当线路受到雷击过电压，感应过电压尚未达到绝缘子闪络时，导线引流球和保护器限流元件引流避雷针司隙开始放电，之后将雷电流导向氧化锌限流元件，雷电流经氧化锌限流元件释放，而工频续流则被氧化锌限流元件截断，达到“避雷”的目的。当线路出现短时工频过电压(毫秒级)时，即使线路处于弱绝缘(工频耐受38KV)，避雷器仍然保证放电，起到保护作用，从而防止因工频续流高温熔断绝缘线路(雷击断线殛绝缘子闪络)，保护绝缘线路，避免发生断线、绝缘子闪络而造成大面积停电．售电量的损失和引起重大的人身伤害事故及由此引发的巨额经济赔偿。

If the line suffers from the lightning and over voltage, and the inductive over voltage hasn't caused the flashover of insulator, the leading ball of conductor and current-limiting element of protector leads the gap of lightning pin to discharge, subsequently, it conducts the lightning current to ZnO current-limiting element, the lightning current releases through ZnO cnrrent-limiting element, and the power frequency continuous curfent is cut off by the ZnO current-limiting element, to arrive the aim of lightning prevention. If the circuit has short-time power frequency over voltage (ms), even if the circuit is in poor insulation (power frequency withstand 38KV), the lightning protector always guarantees the discharge for protection, so as to prevent the fusion of insulating circuit, disconnection and insulator flashover for the high temperature of power frequency continuous current, thus, it can protect the insulating circuit, to avoid the large area power failure, loss of power supply, human injury or enormous economic compensation arising therefrom fur disconnection and flashover of insulator.

产品结构 Structure

HP-LP新型线路绝缘子防雷过电压保护器由非线性电阻部分（保护器- 被复合材料所包裹）、特别的外间隙（避雷针、静间隙球、连接支柱板（高低可调）和固定部分（抱箍、紧固螺母）三部分共同组成（如下图所示）。

HP-LP new-type line insulator protector for lightning and over voltage protection consists of non linear resistor (the proteetor is wrapped with composite material), specially-made external gap (lightning pin, static gap ball, connecting support plate that is adjustable in high and low position) and fixed part including anchor ear and fastening nut, as shown in following diagram.

安装说明 Installation explain

第一步把绝缘子的下螺母松开，将连接支柱板的开口插入并拧紧。

第二步用抱箍把静间隙球与绝缘子上方导线连接。

第三步也是最重要的一步，用可调节连接支柱板高低可调绝缘导线间隙是20-30mm，裸导线间隙是40-50mm达到要求值并拧紧螺母。

Step 1: Loosen the lower nut of insulator, insert the nut into the open of connecting support plate and tighten it.

Step 2: Connect the conductors between the static gap ball and the top of insulator with the anchor ear.

Step 3: This is the important stcp, adjust the gap of insulating conductor to 20-30mm and that of bar conductor to 40-50mm, then, tighten the nut.

FEG型防雷穿刺支柱绝缘子(适用20KV及以下绝缘导线)

FEG type lightning-protection piercing post insulator

用途 Application

固定绝缘导线和防止架空绝缘导线雷击断线的保护装置，适用于铜，铝架空绝缘导线。

Fixed insulated wires and insulated overhead conductors to prevent the disconnection lightning protection device is suitable for copper, aluminum overhead insulated wire.

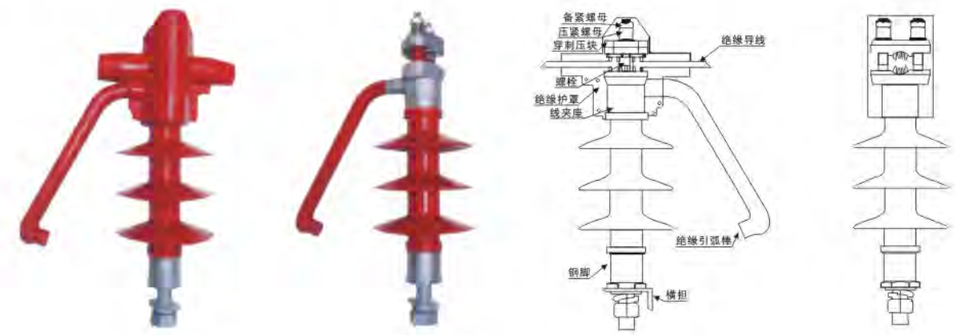

规格范围 Size range

型号规格 Model Specification	导线截面积范围 (mm²) Range of wire cross-sectional area (mm²)
FEG-12/5(50-240)	50-240

型号规格说明 Model Specification

FEG - 12 / 5 (50-240)

- 导线截面范围 Sectional area of conductor
- 额定弯曲耐受负荷 Rated bending withstand load
- 额定电压 Rated voltage
- 防雷支柱绝缘子 Lightning-protection post insulator

性能参数 Parameters

1. 雷电全波冲击耐受电压（峰值）KV: 100
2. 1min工频耐受电压（有效值）KV: 50
3. 工频电弧电流（有效值）KA: 12.4
4. 额定弯曲耐受负荷 KN:5
5. 电小公称爬电距离mm: 360
6. 穿刺部位涂有独特的防水绝缘膏

1. full-wave lightning impulse withstand voltage (peak) KV: 100
2. 1min power frequency withstand voltage (RMS) KV: 50
3. frequency arc currcnt (rms) KA: 12.4
4. rated withstand bending load KN: 5
5. small electric Nominal creepage distance mm: 360
6. puncture site has a unique waterproof coated insulating paste

安装说明 Installation explain

本产品安装在横担上，拧紧螺母即可，等同传统的绝缘子的安装方法，把引弧棒朝向负荷侧，这时，导线的外层应紧靠线槽底部，穿刺齿应刺穿导线的绝缘层与导线的内部导电层紧密相连，在线夹座外部安装绝缘护罩，用固定扣固定绝缘护罩。可参照以上安装示意图。

This product is installed on the cross arm on the tightening nut can be equivalent to the traditional installation method insulators, the arc towards the load side bar, this time, the outer conductor should be close to the groove bottom of the needle piercing the wire teeth should be the insulating layer and conductive layer of the internal wires are closely linked, on-line clip stands guard outside to install insulation, insulation shield with a fixed deduction fixed. Reference to the above diagram can be installed.

FDL型防电验电穿刺接地环(适用20KV及以下绝缘导线)

FDL type lightning-protection electric-check piercing

用途 Application

防止架空绝缘导线雷击断线,以及用于检修施工时的验电和临时接地的保护装置，适用于铜、铝架空绝缘导线。

Overhead insulated wires disconnected to preyent lightni ng strikes, and for the maintenance of the insp ection during the construction of electricity and the temporary grounding of the protection device is suitable for copper, aluiminum overhead insulated conductor.

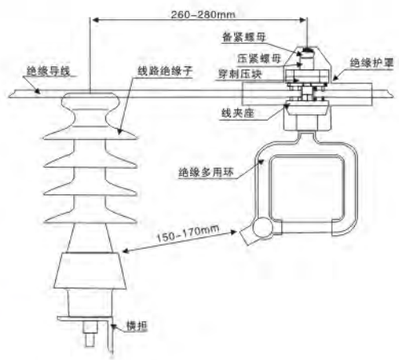

规格范围 Size range

型号规格 Model Specification	导线截面积范围 (mm²) Range of wire cross-sectional area (mm²)
FDL-10/5(50-240)	50-240

型号规格说明 Model Specification

F DL - 50/240

- 导线截面范围 Conductor crose-section range
- 接地线夹 Earthing connector
- 防雷线夹 Lightning Protection

性能参数 Parameters

1. 雷电全波冲击耐受电压（峰值）KV: 100
2. 1min工频耐受电压（有效值）KV: 50
3. 工频电弧电流（有效值）KA: 12.5
4. 穿刺部位涂有独特的防水绝缘膏

1. full-wave lightning impulse withstand voltage (peak) KV: 100
2. 1min power frequency withstand voltage (RMS) KV: 50
3. frequency arc current (rms) KA: 12.5
4. puncture site has a unique waterproof coated insulating paste

安装说明 Installation explain

本产品安装在线路绝缘于的负荷侧，用扭力扳手交替、对称拧紧螺母，这时，导线的外层应紧靠线槽底部，穿刺齿应刺穿导线的绝缘层与导线的内部导电层紧密连接； 并在线夹座外部安装绝缘护罩， 用固定扣固定绝缘护罩， 安装距离尺寸见以上安装示意图。

This product is installed on the load side line insulator with alternating torque wrench, tighten the nut symmetry, in which case the outer conductor should be close to the groove bottom of the tooth puncture wire insulation should be piercing the internal conductive layer and the conductor in close connection; and online clip stands guard outside to install insulation, with a fixed deduction fixed insulation shields installed to install from the size, see above diagram.

Pengyou
Pengyou power fitting
绝缘架空金具
AERIAL INSULATION CONDUCTOR FITTING

CFH型穿刺式防弧线夹(适用20KV及以下绝缘导线)

CFH type piercing arc-protection connector

用途 Application

防止架空绝缘导线雷击断线的保护装置，适用于铜、铝架空绝缘导线。

Overhead insulated conductors to prevent the disconnection lightning protection device is suitable for copper, aluminum overhead insulated conductor.

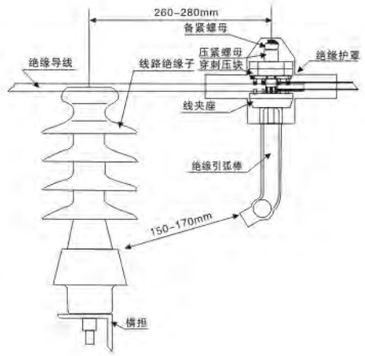

规格范围 Size range

型号规格 Model Specification	导线截面积范围 (mm²) Range of wire cross-sectional area (mm²)
CFH-10/5(50-240)	50-240

型号规格说明 Model Specification

C FH - 50/240

- 导线截面范围 Conductor crose-section range
- 防弧 Anti-arc
- 穿刺线夹 Piercing connector

性能参数 Parameters

1. 雷电全波冲击耐受电压（峰值）KV: 100
2. 1min工频耐受电压（有效值）KV: 50
3. 工频电弧电流（有效值）KA: 12.5
4. 穿刺部位涂有独特的防水绝缘膏

1. full-wave lightning impulse withstand voltage (peak) KV: 100
2. 1min power frequency withstand voltage (RMS) KV: 50
3. frequency arc current (rms) KA: 12.5
4. puncture site has a unique waterproof coated insulating paste

安装说明 Installation explain

本产品安装在线路绝缘于的负荷侧，用扭力扳手交替、对称拧紧螺母，这时，导线的外层应紧靠线槽底部，穿刺齿应刺穿导线的绝缘层与导线的内部导电层紧密连接；并在线夹座外部安装绝缘护罩，用固定扣固定绝缘护罩，安装距离尺寸见以上安装示意图。

This product is installed on the load side line insulator with alternating torque wrench, tighten the nut symmetry, in which case the onter conductor should be close to tile groove bottom of the tooth puncture wire insulation should be piercing the internal conductive layer and the conductor in close connection; and online clip stands guard outside to install insulation, with a fixed deduction fixed insulation shields installed to install from the size, see above diagram.

JGW 型高压电缆固定夹

JGW High voltage cable cleat

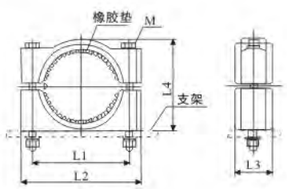

用途 Application

产品采用高强度防腐铝合金材料制造，用于固定电缆的摆放位置，其夹紧结构采用螺栓紧固。固定夹结构紧凑合理。安装方便灵活，不损伤电缆。

The product is made of high-strength anti-corrosive aluminum alloy to secure the placement of cables,Its fixture structure is anchored by bolts.The retaining clip is compact,reasonable in conformation,easy and flexible for installation and does not do harm to the cahle

规格及技术参数 Specification

型号 type	适用 电缆外径 Φ Applicable outside diameter of cable	L1	L2	L3	L4	M
JGW-1	75-84	120	150	80	114	2-M12
JGW-2	85-94	130	160	80	124	2-M14
JGW-3	95-104	140	175	80	138	2-M14
JGW-4	105-114	150	185	80	150	2-M14
JGW-5	115-124	160	195	90	160	2-M14
JGW-6	125-134	175	215	90	175	2-M16
JGW-7	135-146	190	230	100	195	2-M16

JGP 型高压三芯电缆固定夹

JGP High voltage three cores cable cleat

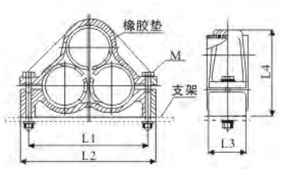

用途 Application

产品采用高强度防腐铝合金材料制造，用于悬挂三根电缆的固定摆放，其夹紧机构采用螺栓紧固，固定夹结构紧凑合理，安装方便灵活，不损伤电缆

The product is made of high-strength anti-corrosive aluminum alloy to secure the placement of 3 cables,Its fixture structure isanchored by bolts and spring.The retaining clip is compact,reasonable in conformation,easy for installation and does not do harm to the cahle.

规格及技术参数 Specification

型号 type	适用 电缆外径 Φ Applicable outside diameter of cable	L1	L2	L3	L4	M
JGP-1	45-55	150	180	65	135	2-M12
JGP-2	55-68	186	214	70	156	2-M12
JGP-3	68-80	224	164	75	186	2-M14
JGP-4	80-90	245	278	80	205	2-M14
JGP-5	90-100	280	322	100	235	2-M16
JGP-6	100-114	290	332	100	252	2-M16

CFH型穿刺式防弧线夹(适用20KV及以下绝缘导线)

JGH High voltage cable cleat

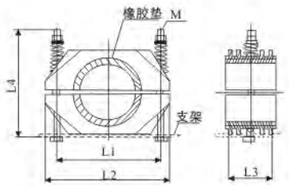

用途 Application

产品采用高强度防腐铝合金材料制造，用于固定电缆的摆放位置，其夹紧结构采用螺栓紧固。固定夹结构紧凑合理。安装方便灵活，不损伤电缆。

The product is made of high-strength anti-corrosive aluminum alloy to secure the placement of cables,Its fixture structure is anchored by bolts.The retaining clip is compact,reasonable in conformation,easy and flexible for installation and does not do harm to the cahle

规格及技术参数 Specification

型号 type	适用 电缆外径 Φ Applicable outside diameter of cable	L1	L2	L3	L4	M
JGH-01	55-65	130	160	75	160	2-M12
JGH-0	65-80	130	160	75	160	2-M12
JGH-1	80-100	150	182	80	180	2-M12
JGH-2	100-120	190	230	80	200	2-M12
JGH-3	120-136	180	230	80	220	2-M12

JGX 型高压悬挂电缆固定夹

JGX Hgh voltage hebging cable cleal

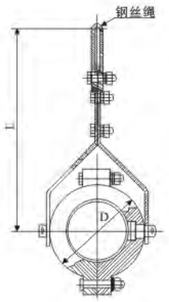

用途 Application

产品采用高强度防腐铝合金材料制造，用于固定电缆，其挂板与张紧钢丝绳连接，固定夹结构紧凑合理，安装方便。不损伤电缆。

The product is made of high-strength anti-corrosive aluminum alloy to secure cables,Its hanging board is connected with thetension steel rope.The retaining clip is compact,reasonable in conformation,easy for installation and does not do harm to the cable.

规格及技术参数 Specification

型号 type	适用 电缆外径 Φ Applicable outside diameter of cable	L	D
JGX-1	50-60	280	98
JGX-2	60-70	290	112
JGX-3	70-80	306	126
JGX-4	80-90	320	140
JGX-5	90-100	336	156

节能型防振锤

Energy saving damper

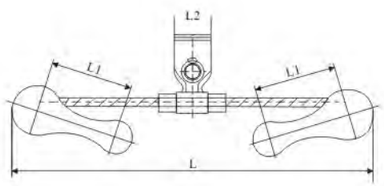

用途 Application

节能型狗骨防震锤设计能有效控制微风所形成所有各种等级振动，以有效地防止金属疲劳进而延长使用寿命。

Energy-saving anti-vibration hammer dog bone designed to effectively control the breeze, formed by all kinds of vibration levels in order to effectively prevent metal fatigue, and then to extend the service life。

规格及技术参数 Specification:

型号 Type	适用导线范围 Applicable conductor	L	L1	L2	重量 Weight (kg)
DB05B07SS	7.50~12.00	420	80	35	1.3
DB05B09SS	9.00~12.00	420	80	35	1.3
DB05B12SS	12.10~15.00	420	80	40	1.3
DB05B15SS	15.10~18.00	420	80	40	1.3
DB05B18SS	18.10~21.00	420	80	45	1.3
DB1B21SS	21.10~24.00	456	97	45	2.5
DB2B24SS	24.10~27.00	480	110	50	4.6
DB2B27SS	27.10~30.00	480	110	50	4.6

JBY型力矩式跨径线夹

JBY type torque type transition connector

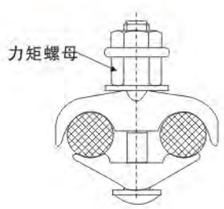

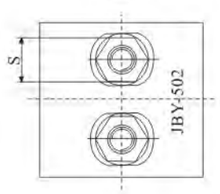

用途 Application:

特制力矩螺母能长期保持导线与线夹间的暄定的接触压力；

本体弧形设计，与所连接的导线共同构成“同呼吸”的能量存储系统，大大提高了线夹的过载能力和使用寿命；

线夹和导线接触的各线槽内均涂有独特的导电抗氧化剂。

Special force moment nut is able to keep constant contact pressure between the lead and wire clamp for long time;

Arc shape of the body forms a common energy-storage system with the connected conductor, which sharply improves the over load capacity and service life of wire clamp;

Wire ducts contacting with wire cl amps and conductors are coated with a special conductive antioxidant.

规格及技术参数 Specification:

型号 Type	适用导线 Conductor	适用直径范围 Conductor (mm²)	导线数量 × 规格 Conductor (mm²)	力矩螺母
JBY-301	10~50	Φ3.8~12.0	1×M8×30	M14
JBY-302	10~50	Φ3.8~12.0	2×M8×30	M14
JBY-502	25~150	Φ6.0~16.0	2×M8×50	M14
JBY-602	50~240	Φ8.3~18.4	2×M12×65	M19
JBY-603	50~240	Φ8.3~18.4	3×M12×65	M19
JBY-802	95~300	Φ11.6~23.0	2×M12×65	M19
JBY-803	95~300	Φ11.6~23.0	3×M12×65	M19

Pengyou
Pengyou power fitting
绝缘架空金具
AERIAL INSULATION CONDUCTOR FITTING

JJCB 型变压器接地线夹

JJCB Transformer Earthing clamp

用途 Application

1、用于配电变压器高压引线和户外高压跌落式熔断器下端的接续。

2、当高压跌落式熔断器与电源断开．用接地棒挂入接地环下端，起变压器高压线圈放电作用。

1. For splicingof high-voltagelead ofdistributiontransformer as well as lower end of outdoor high-voltage drop-out fuse cutout.

2. When the high-voltage drop-ont fuse cutout is disconnected from the power supply, connect it with the lower end of earthing ring through earthing rod, it would serve fur electric discharge of high-voltage coil of transfurller.

特点 Structure feature:

1、安装简单，方便实用。
2、结构密封，防腐蚀、防潮、防水、防老化。
3、力矩螺母确保恒定穿刺压力．接续性能可靠。
4、产品外部紧包绝缘硅橡胶，保证其有足够的绝缘强度。
1. Simple installation, convenient and practical.
2. Hermatic structure, corrosion prevention, dampproof, watertight, anti-aging.
3. Forcemomentnut guaranteesconstantpiercingpressure,with reliable splicing performance.
4. External of product is tightly wrapped with insulting silicon

规格及技术参数 Specification

产品型号 Type	适用导线 Conductor (mm²)	螺栓数量 Bolt	电压等级 Voltage
JJCB/10-1	25~70mm²	1	10KV
JJCB/10-2	25~70mm²		10KV
JJCB/10-3	25~70mm²	1	10KV

安装说明 Installation explain

1、把穿刺型变压器接地线夹上 的麻花型铜铝接线端子，正确连接在10kV级户外高压跌落式熔断器下端，摆动接地环，确保穿刺型变压器接地线必处于垂直方向。然后拧紧线夹上端接线端于上的法兰螺母。

2、将配电变压器高压引线穿过穿刺线夹的主线位置，引线上端连接至氧化锌避雷器上。再用手预紧力矩螺母。

3、用专用力矩扳手棘轮一端拧紧力矩螺母直至断开即可。

4、引线下端连接至变压器进线端的线夹上。

1. Connect the twisted copper-aluminum connection terminal that on the earthing clamp of piercing transformer to the lower end of outdoor high-voltage drop-out fuse cutout of 10kV correctly, swing the earthing ring, make sure that the earthing conductor of piercing transformer is in vertical direction, then tighten the flange nut on the connection terminal on upper end of clamp.
2. Put the high-voltage lead of distribution transformer through the main wire position of piercing clamp, connect the upper end of lead to zinc oxide arrester, then pre-tighten the force moment nut with hands.
3. Make use of one end of special moment spanner ratchet to tighten the force moment nut until it disconnects.
4. Connect the lower end of lead to the clamp of incoming terminal of transformei.

JFL、JFG 铝、铜铝过渡分支线夹及绝缘罩(适用20KV及以下绝缘导线)

JEL,JFG aluminium,copper-aluminium transition branch clip and insulation cover

用途 Application:

JFL铝分支线夹及绝缘罩适用于绝缘高压电力线路电缆直接接出到铝导线的分支连接；JFG铜铝过渡分支线夹殛绝缘罩适用于绝缘高压电力线路电缆直接接出到铜导线的过渡分支连接。

JFL and insulation cover is suitable for the branchlink of aluminium conductor from the insulation high-voltage electric power cable. JFG and insulation covet is suitable for trasirion branch link of copper conductor from the insulation high-voltage electric power wlre cable.

铝分支线夹及绝缘外壳
Aluminium branch clip and insulatlon covet

铜铝过渡分支线夹及绝缘外壳
Copper-Aluminium transition branch clip and insulation cover

规格及技术参数 Specification:

产品名称 Name	型号规格 Type	适用导线 Conductor(mm²)	
		主导线 Main	分支导线 Branch
铝分支线夹 Aluminium branch clip	JFL-25	50～240	25
	JFL-35		35
	JFL-50		50
	JFL-70		70
	JFL-95		95
	JFL-120		120
	JFL-150		150
	JFL-185		185

产品名称 Name	型号规格 Type	适用导线 Conductor(mm²)	
		主导线 Main	分支导线 Branch
铜铝过渡分支线夹 Copper -Aluminium transition branch clip	JFG-25	50～240	25
	JFG-35		35
	JFG-50		50
	JFG-70		70
	JFG-95		95
	JFG-120		120
	JFG-150		150
	JFG-185		185

NXH 系列铝合金耐张线夹

NXH Series aluminium alloy strain clamp

用途 Application:

NXH 系列铝合金耐张线夹适用于10KV及以下配电线路中，将架空铝导线和杆塔相连接。

NXH Series aluminium alloy strain clamp is suilable for distribution line up to l 0KV,connecting aerial ahmfinium conduct and pole tower.

结构特点 Structure feature:

- 主体采用高强度、抗氧化的铝合金；
- 楔块夹紧结构，安装使用方便；
- 无磁滞涡流损耗，节能效果显著。
- The body made of high strength tighten aluminium alloy.
- Tighten structure,easy installation.
- No waste electric energy.

规格及技术参数 Specification:

型号规格 Type	适用导线 Conductor	握力 Grip strength (KN)	破坏荷重 Failure load (KN)
NXH-1	LJ50-LJ70	7.2	10.95
NXH-2	LJ95-LJ120	12.1	19.42

JF 系列导线分流盒

JF Series branch box

用途 Application:

JF 系列配护罩户内铜线卡用于一户一表工程电力进户线与分支导线的连接。

JF-series are with indoor brass wire clip of cover, which can be used for the connection of in-wire and branch wire for one-house one meter system.

产品特点 Procuctsfeature:

线夹安装方便、连接紧密、接触电阻小、温升低、且有绝缘性能良好的防窃电护罩，使用安全可靠。

Wire clip features easy installation, compact connection, small conlact resistance, low temperature and good insulation with outstanding anti-electricity-theft funotion, which ensures safety and reliability.

规格及技术参数 Specification:

规格型号 Type	适用导线 Conductor(mm²)	
	主导线 Main	分支导线 Branch
JF-10～16mm²/10～16mm²	10～16	10～16
JF-35～50mm²/10～16mm²	35～50	10～16
JF-35～50mm²/35～50mm²	35～50	35～50
JF-70～95mm²/10～16mm²	70～95	10～16
JF-70～95mm²/35～50mm²	70～95	3～50

JF2 系列导线分流盒

JF2 Series branch box

用途 Application:

JF2 系列双分流铜线卡用于一户一表工程电力进户线与分支导线的连接。

JF2-series dual-splitting brass wire clip is used for the connection of in-wire and brand wire in one-house one meter system.

产品特点 Procuctsfeature:

线夹双进双出、安装方便、连接紧密、接触电阻小、温升低、且有绝缘性能良好的防窃电护罩，使用安全可靠。

With dual in and out, wire clip features easy installation, compact connection, small conlact resistance, low temperature and good insulation with outstanding anti-electricity-theft funotion, which ensures safety and reliability.

规格及技术参数 Specification:

规格型号 Type	适用导线 Conductor(mm²)	
	主导线 Main	分支导线 Branch
JF2-10～25mm²/6～16mm²	10～25	6～16
JF2-35～50mm²/10～25mm²	35～50	10～25
JF2-70～120mm²/25～50mm²	70～120	25～50

JF4 系列导线分流盒

JF4 Series branch box

用途 Application:

JF4系列四分流铜线卡用于一户一表工程电力进户线与分支导线的连接。

JF4-series four-splitting brass wire clip is used for the connection of in-wire and brand wire in one-house one meter system.

产品特点 Procuctsfeature:

线夹四进四出、安装方便、连接紧密、接触电阻小、温升低、且有绝缘性能良好的防窃电护罩，使用安全可靠。

With four in and out, wire clip features easy installation,compact connection, small conlact resistance, low temperature and good insulation with outstanding anti-electricity-theft funotion, which ensures safety and reliability.

规格及技术参数 Specification:

规格型号 Type	适用导线 Conductor(mm^2)	
	主导线 Main	分支导线 Branch
JF4-35～50mm^2 /10～25mm^2	35～50	10～25
JF4-35～50mm^2 /35～50mm^2	35～50	35～50
JF4-70～120mm^2 /25～50mm^2	70～120	25～50

SL、P-7、WS-7A、PXP、JB 绝缘罩

SL,P-7,WS-7A,PXP,JB insulation cover

绝缘罩性能特点用途 Insulation cover performance feature:

- 工频耐压：≥18KV保压1分钟不击穿；
- 绝缘电阻：>1.0×10^{14}Ω；
- 环境温度：-30℃～90℃；
- 耐气候性能：经人工气候老化试验1008小时后性能良好。

- Withstand voltage:≥1 8KV keep voltage one minute not breakdown.
- Insulation resistance: > 1.0×10^{14}Ω
- Enviromnents temperature:-30℃--90℃.
- Weather proof performance:have good performanced after 1008 hours artifical climate aging test

SL(Z)绝缘罩
SL(Z) insulation cover

P-7(Z)绝缘罩
P-7(Z) insulation cover

WS(Z)-7A绝缘罩
P-7(Z) insulation cover

WS(Z)-7A绝缘子绝缘罩
P-7(Z) insulation cover

PXP(Z)绝缘罩
PXP(Z) insulation cover

JB(Z)-2绝缘罩
JB(Z)-2 insulation cover

JB(Z)-4绝缘罩
JB(Z)-4 insulation cover

电力变压器接线柱安全护罩

Electric power transformer safety shield

接线端子安全护罩 Connecting terminal safety shield:

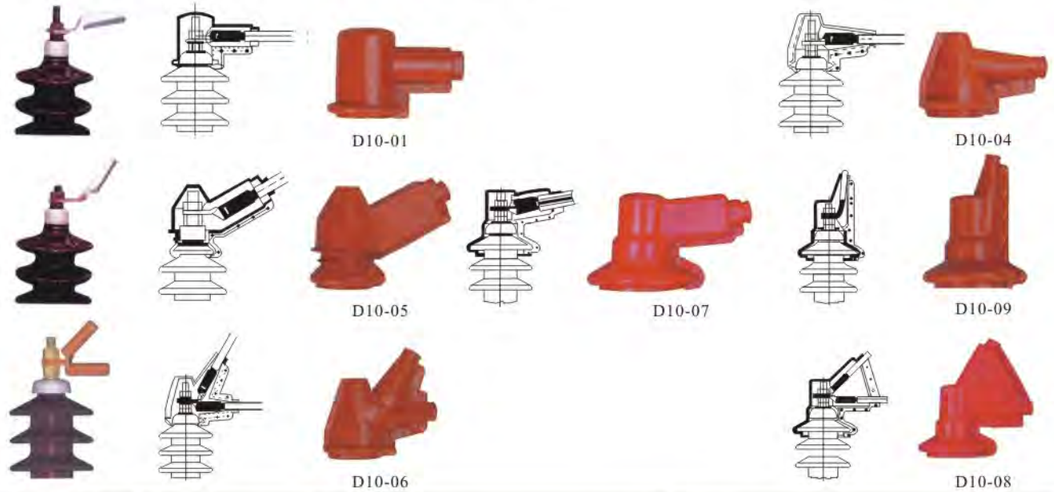

类别 Type	订货代号 No. 护罩 Shield	配用金具名称 Fitting Name	护罩 Shield 型号 Catalog No.	连接方式 Connection	导线数×规格 Conductor No.×Specification	适用变压器容量 Capacity	备注 Note
高压进线 High voltage	D10-01	接线端子 Connecting terminal	FT10-D02A	横 Horizontal	1×16^2～150^2	20～500KVA	硅橡胶 Silicone rubber
	D10-04		FT10-D01A	横 Horizontal	1×16^2～95^2	20～500KVA	
	D10-05		FT10-D05B	斜 Incline	2×16^2～95^2	20～500KVA	
	D10-06		FT10-D06AB	横 Horizontal 斜 Incline	1×16^2～95^2	20～500KVA	
	D10-07		FT10-D07B	斜 Incline	2×16^2～95^2	10～630KVA	
	D10-08		FT10-D08AB	横 Horizontal 斜 Incline	2×16^2～95^2	10～630KVA	
	D10-09		FT10-D09B	斜 Incline	1×16^2～95^2	10～630KVA	

油变线夹安全护罩 Transformer clamp safety shield:

类别 Type	订货代号 No. 护罩 Shield	配用金具名称 Fitting Name	护罩 Shield 型号 Catalog No.	连接方式 Connection	导线数×规格 Conductor No.×Specification	适用变压器容量 Capacity	备注 Note
低压出线 Low voltage	G1-12	M16油变线夹0°	FT1-G12A	横 Horizontal	1×35^2～240^2	20～400KVA	硅橡胶
	G1-22	M22油变线夹0°	FT1-G22A	横 Horizontal	1×35^2～150^2	20～400KVA	非热缩

油变线夹安全护罩 Transformer clamp safety shield:

类别 Type	订货代号 No. 护罩 Shield	配用金具名称 Fitting Name	护罩 Shield 型号 Catalog No.	连接方式 Connection	导线数×规格 Conductor No.×Specification	适用变压器容量 Capacity	备注 Note
低压出线 Low voltage	G1-02	M16油变线夹30°	FT1-G01B	斜 Incline	1×35²～240²	20～500KVA	硅橡胶 Silicone rubber
	G1-10	M22油变线夹30°	FT1-G05B	斜 Incline	1×35²～240²	20～500KVA	
	G1-20	M22及以下双槽油变线夹30°	FT1-G20B	斜 Incline	1×95²～240²	10～630KVA	

油变线夹安全护罩 Transformer clamp safety shield:

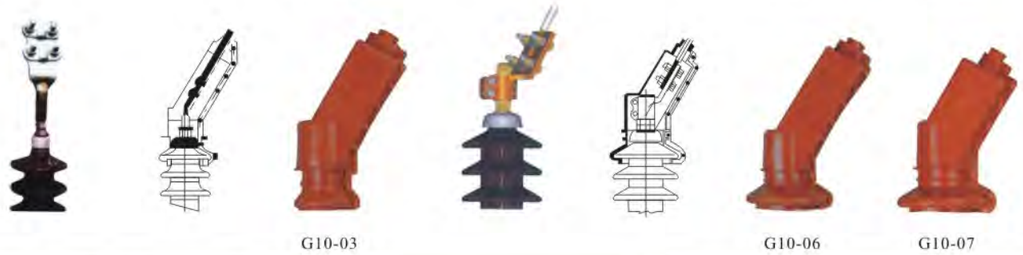

类别 Type	订货代号 No. 护罩 Shield	配用金具名称 Fitting Name	护罩 Shield 型号 Catalog No.	连接方式 Connection	导线数×规格 Conductor No.×Specification	适用变压器容量 Capacity	备注 Note
高压进线 High voltage	G10-01	M16及以下油变线夹	FT10-G01B	斜 Incline	1×16²～120²	20～500KVA	硅橡胶 Silicone rubber
	G10-03	M22及以下油变线夹	FT10-G05B	斜 Incline	1×16²～240²	20～500KVA	
	G10-02	0° 设备线夹1,2号单 0° 孔油变经夹	FT10-G04A	横 Horizontal	1×16²～70²	20～500KVA	
	G10-06	油变线夹30°	FT10-G06B	斜 Incline	2×16²～240²	10～630KVA	
	G10-07	M16及以下油变线夹	FT10-G07B	斜 Incline	1×16²～240²	10～630KVA	
	G10-20	M22及以下双油槽油变线夹	FT10-G20B	斜 Incline	2×16²～240²	10～630KVA	

Pengyou
Pengyou power fitting
绝缘架空金具
AERIAL INSULATION CONDUCTOR FITTING

接线端子安全护罩 Connecting terminal safety shield:

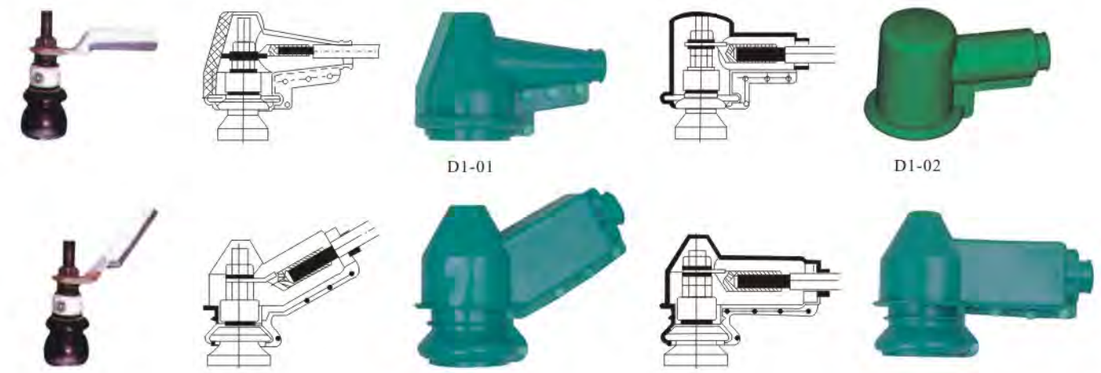

类别 Type	订货代号 No. 护罩 Shield	配用金具名称 Fitting Name	护罩 Shield 型号 Catalog No.	连接方式 Connection	导线数×规格 Conductor No.×Specification	适用变压器容量 Capacity	备注 Note
低压出线 Low voltage	D1-01	接线端子 Connecting terminal	FT1-D01A	横 Horizontal	1×35²～95²	20～500KVA	硅橡胶 Silicone rubber
	D1-02		FT1-D02A	横 Horizontal	1×35²～150²	20～500KVA	
	D1-11		FT1-D03A	横 Horizontal	1-2×120²～240²	20～500KVA	
	D1-12	30° 接线端子	FT1-D04B	斜 Incline	1-2×120²～240²	20～500KVA	

设备线夹安全护罩 Terminal connectorsafety shield:

类别 Type	订货代号 No. 护罩 Shield	配用金具名称 Fitting Name	护罩 Shield 型号 Catalog No.	连接方式 Connection	导线数×规格 Conductor No.×Specification	适用变压器容量 Capacity	备注 Note
高压进线 High voltage	S10-01	1-2号设备线夹0°	FT10-S01A	横 Horizontal	1×2～70²	20～500KVA	硅橡胶 Silicone rubber
	S10-02	1-2号设备线夹30°	FT10-S02B	斜 Incline	1×2～70²	20～500KVA	
	S10-03	3-4号设备线夹0°	FT10-S03A	横 Horizontal	1×2～150²	20～500KVA	
	S10-04	3-4号设备线夹30°	FT10-S04B	斜 Incline	1×2～150²	20～500KVA	
	S10-07	3-4号设备线夹30°	FT10-S07B	斜 Incline	1×2～240²	20～500KVA	
	S10-09	3-4号设备线夹0°	FT10-S09B	横 Horizontal	1×95～240²	100～500KVA	

设备线夹安全护罩 Terminal connectorsafety shield:

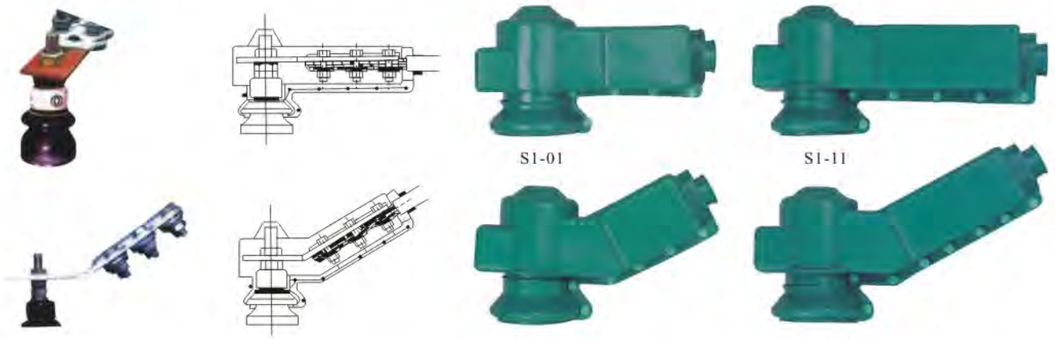

S1-01 S1-11 S1-02 S1-12

类别 Type	订货代号 No. 护罩 Shield	配用金具名称 Fitting Name	护罩 Shield 型号 Catalog No.	连接方式 Connection	导线数×规格 Conductor No.×Specification	适用变压器容量 Capacity	备注 Note
低压出线 Low voltage	S1-01	1-2号设备线夹0°	FT1-S05A	横 Horizontal	$1\times35^2\sim95^2$	20～500KVA	硅橡胶 Silicone rubber
	S1-02	1-2号设备线夹30°	FT1-S06B	斜 Incline	$1\times35^2\sim95^2$	20～500KVA	
	S1-11	3-4号设备线夹0°	FT1-S03A	横 Horizontal	$1\times120^2\sim240^2$	20～500KVA	
	S1-12	3-4号设备线夹30°	FT10-S04A	斜 Incline	$1\times120^2\sim240^2$	20～500KVA	

设备线夹安全护罩 Terminal connectorsafety shield:

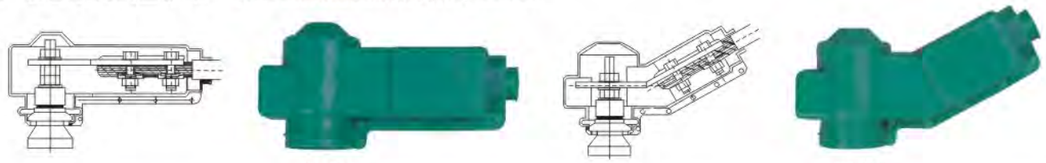

S1-21 S1-22

类别 Type	订货代号 No. 护罩 Shield	配用金具名称 Fitting Name	护罩 Shield 型号 Catalog No.	连接方式 Connection	导线数×规格 Conductor No.×Specification	适用变压器容量 Capacity	备注 Note
低压出线 Low voltage	S1-21	1-2号设备线夹0°	FT1-S21A	横 Horizontal	$1\text{-}2\times16^2\sim150^2$	10～100KVA	硅橡胶 Silicone rubber
	S1-22	1-2号设备线夹30°	FT1-S22B	斜 Incline	$1\text{-}2\times16^2\sim150^2$	10～100KVA	

母线安全护罩 Bus-bar safety shield:

M1-01 M1-02

类别 Type	订货代号 No. 护罩 Shield	配用金具名称 Fitting Name	护罩 Shield 型号 Catalog No.	连接方式 Connection	导线数×规格 Conductor No.×Specification	适用变压器容量 Capacity	备注 Note
低压出线 Low voltage	M1-01	60母排	FT1-M01	横 Horizontal	1×6×60	10～100KVA	硅橡胶 Silicone rubber
	M1-02		FT1-M02	横 Horizontal	1×6×60	10～100KVA	

油变母排安全护罩 Bus-bar transformer safety shield:

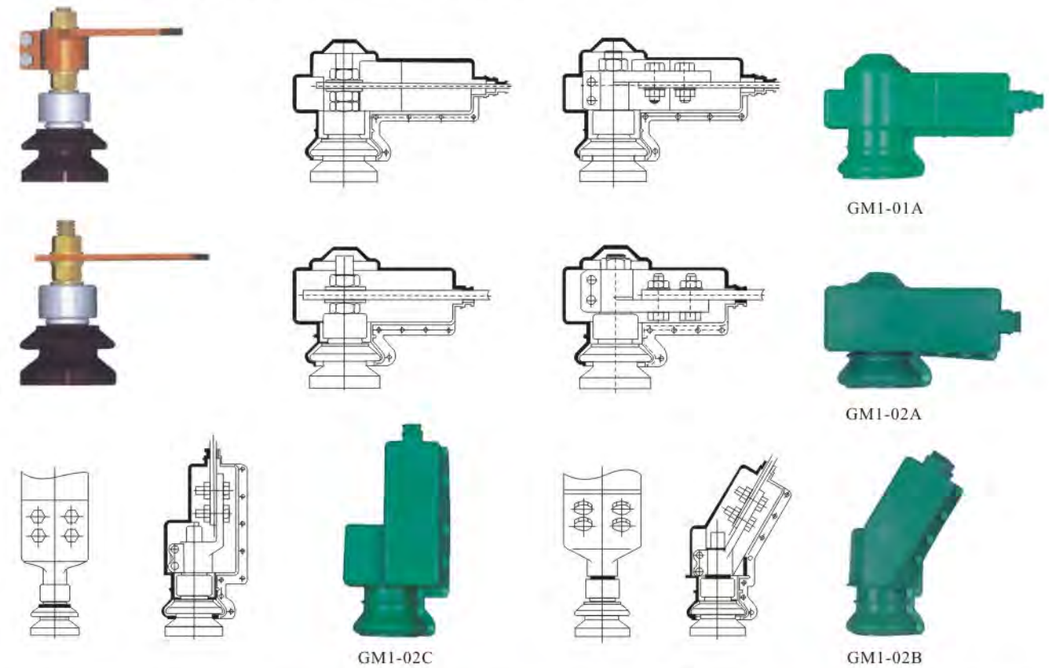

GM1-01A GM1-02A GM1-02C GM1-02B

类别 Type	订货代号 No. 护罩 Shield	配用金具名称 Fitting Name	护罩 Shield 型号 Catalog No.	连接方式 Connection	导线数×规格 Conductor No.×Specification	适用变压器容量 Capacity	备注 Note
低压出线 Low voltage	GM1-01A	M22油变60母排 Bus-bar	FT1-GM01A	横 Horizontal	1×10×60	10～630KVA	硅橡胶 Silicone rubber
	GM1-02A	M22油变100母排 Bus-bar	FT1-GM02A	横 Horizontal	1×10×100	10～630KVA	
	GM1-02C	M22油变100母排 Bus-bar	FT1-GM02C	竖 Vertical	1×10×100	10～630KVA	
	GM1-02B	M22油变100母排 Bus-bar	FT1-GM02B	斜 Incline	1×10×100	10～630KVA	

母排、计量箱、并沟线夹安全护罩

M10-01 S1-08 MB-01

类别 Type	订货代号 No. 护罩 Shield	配用金具名称 Fitting Name	护罩 Shield 型号 Catalog No.	连接方式 Connection	导线数×规格 Conductor No.×Specification	适用变压器容量 Capacity	备注 Note
高压进线 High voltage	M10-01	60×6及以下母排	FT10-M03	横 Horizontal	1×6×60	10～630KVA	硅橡胶 Silicone rubber
	S1-08	JLS-10计量箱接线夹型	FT10-S08	三通	$3\times16^2\sim95^2$	JLS-10	
低压出线 Low voltage	MB-01	B3并沟线夹+母排	FT1-MB01	横 Horizontal	$3\times50^2\sim240^2$	10～630KVA	

氧化锌避雷器护罩 Zinex oxide arrester shield:

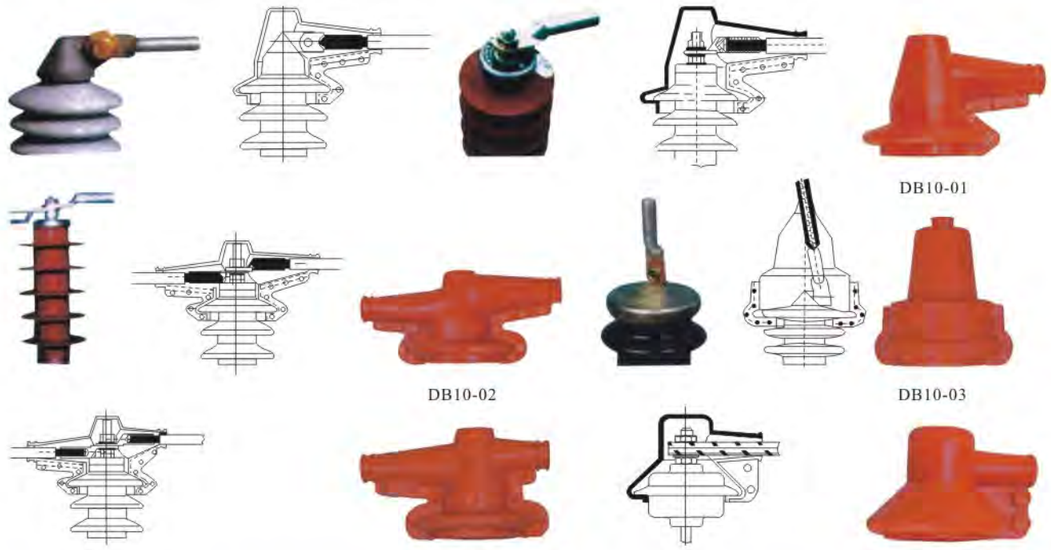

类别 Type	订货代号 No. 护罩 Shield	配用金具名称 Fitting Name	护罩 Shield 型号 Catalog No.	连接方式 Connection	导线数×规格 Conductor No.×Specification	适用变压器容量 Capacity	备注 Note
高压进线 High voltage	DB10-01	复合氧化锌避雷器+接线端子 Composite Zine oxide arrester +connecting terminal	FT10-DB01	横 Horizontal	$1\times16^2\sim95^2$	6～10KVA配电型	硅橡胶 Silicone rubber
	DB10-02		FT10-DB02	横、横 Horizontal	$2\times16^2\sim95^2$	6～10KVA配电型	
	DB10-04		FT10-DB04	横、横 Horizontal	$2\times16^2\sim95^2$	6～10KVA配电型	
	DB1-01		FT1-DB05	横 Horizontal	$2\times16^2\sim240^2$	220～380V	
	DB10-03	阀式避雷器 Valve type arrester	FT10-DB03	竖 Vertical	$1\times16^2\sim240^2$	6～10KVA配电型	

FJX 系列户外分接箱绝缘护罩

FJX Series outdoor branch box insulation cover

用途 Application:

用于配电线路中变电装置上分接箱的绝缘防护。

It is suitable for distribution line installation of branch box,it' action is insulation protection.

FJX-T (三色)
FJX-T(Three colour)

FJX-P (三色)
FJX-P(Three colour)

FJX-F (三色)
FJX-F(Three colour)

10KV 架空绝缘线路耐张串装置图

10KV aerial insulation wire strain string installation drawing

XP-4 盘形悬式绝缘子耐张串 XP-4 supension insulation strain wirestring:

XP-4 盘形悬式绝缘子耐张串材料表

XP-4 suspension insulation strain wire string material table

序号 No.	名称 Name	型号规格 Size	数量 No.
1	直角挂板 Right-angle clevis	Z-7	1
2	球头挂环 Ball-eye	QP-7	1
3	盘形悬式绝缘子 Insulation	XP-4	2
4	盘形悬式绝缘子绝缘罩 Insulation cover	PXP(Z)	1
5	双联碗头挂板 Double-link socket-clevis eye	WS-7	1
6	碗头挂板绝缘罩 Socket clevis-eye insulation cover	WS(Z)-7	1
7	楔型耐张线夹 Strain clamp(wedge type)	NXL-(规格待选用) NXL-(size choose)	1
8	楔型耐张线夹绝缘罩 Strain clamp insulation cover	NXL-(规格待选用) NXL-(size choose)	1
9	自粘性绝缘带 Self-sticky insulation tape	J	适量

备注：1、铜芯线路耐张线夹可选用NXT；
2、0.4KV 线路应减少一个悬式绝缘子。

Note: 1.Copper core wire strain clamp NXL change into NXT.
2.0.4KV wire decrease one suspand insulator.

52-9A 改型悬式绝缘子耐张串 52-9A suspension insulator strain string(change type):

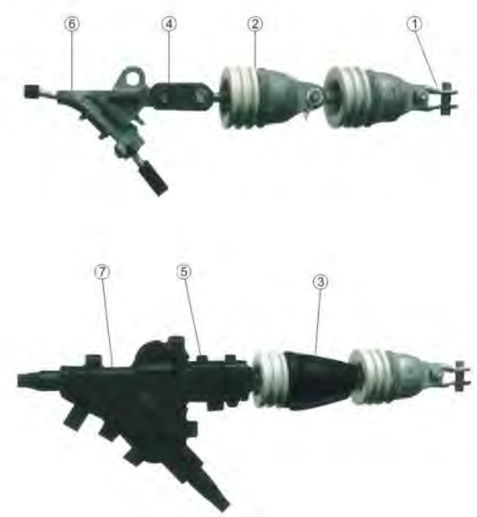

52-9A 改型悬式绝缘子耐张串材料表

52-9A suspension insulator strain string(change type) material table

序号 No.	名称 Name	型号规格 Size	数量 No.
1	U型挂环 Shackle	U-7	1
2	改型悬式绝缘子 Suspension insulator	52-9A	2
3	盘形悬式绝缘子绝缘罩 Insulator insulation cover	PXP(Z)	1
4	平行挂板 Parallel clevis	P-7	1
5	平行挂板绝缘罩 Parallel clevis is insulation cover	P-7(Z)	1
6	楔型耐张线夹 Strain clamp(wedge type)	NXL-(规格待选用) NXL-(size choose)	1
7	楔型耐张线夹绝缘罩 Strain clampinsulation cover	NXL-(规格待选用) NXL-(size choose)	1
8	自粘性绝缘带 Self-sticky insulation tape	J	适量

备注：1、铜芯线路耐张线夹可选用NXT；
2、0.4KV 线路应减少一个悬式绝缘子。

Note: 1.Copper core wire strain clamp NXL change into NXT.
2.0.4KV wire decrease one suspand insulator.

1KV 电缆终端和中间连接

1KV cable terminal and intermediate link

朋友热缩的低压产品广泛应用于1KV电缆的末端处理和中间连接，中间连接，可分为二芯、三芯、四芯、五芯等产品。

Pengyou low-voltage product of heat shrinkable is suitablefor the end ofcable dealing and intermedlate1ink of 1KV. The products areclassified into double cores, three cores, four cores, five cores etc.

●产品规格型号 Product specification

产品名称 Name	型号规格 Type	适用电缆截面 Section
1KV 户内交联二芯终端 1KV indoor cross-link double-core terminal	SY-1/2.0	10-16
	SY-1/2.1	25-50
	SY-1/2.2	70-120
	SY-1/2.3	150-240
1KV 户内交联三芯终端 1KV indoor cross-link three cores terminal	SY-1/3.0	10-16
	SY-1/3.1	25-50
	SY-1/3.2	70-120
	SY-1/3.3	150-240
1KV 户内交联四芯终端 1KV indoor cross-link four-cores terminals	SY-1/4.0	10-16
	SY-1/4.1	25-50
	SY-1/4.2	70-120
	SY-1/4.3	150-240
	SY-1/4.4	300-500
1KV 户内交联五芯终端 1KV indoor cross-link five-cores terminal	SY-1/5.0	10-16
	SY-1/5.1	25-50
	SY-1/5.2	70-120
	SY-1/5.3	150-240

●产品规格型号 Product specification

产品名称 Name	型号规格 Type	适用电缆截面 Section
1KV 中间交联二芯接头 1KV intermediate cross-link double core joints	JSY-1/2.0	10-16
	JSY-1/2.1	25-50
	JSY-1/2.2	70-120
	JSY-1/2.3	150-240
1KV 中间交联三芯接头 1KV intermediate cross-link three-cores joints	JSY-1/3.0	10-16
	JSY-1/3.1	25-50
	JSY-1/3.2	70-120
	JSY-1/3.3	150-240
1KV 中间交联四芯接头 1KV intermediate cross-link four-cores joint	JSY-1/4.0	10-16
	JSY-1/4.1	25-50
	JSY-1/4.2	70-120
	JSY-1/4.3	150-240
1KV 中间交联五芯接头 1KV intermediate cross-link five-cores joint	JSY-1/5.0	10-16
	JSY-1/5.1	25-50
	JSY-1/5.2	70-120
	JSY-1/5.3	150-240

单芯电缆及特殊截面积可根据用户要求设计生产。The designedofsingle core cable and special section in accordance with demands of user.

●产品技术指标 Product technical index

项目 Item		试验项目 Test item	标准要求 Standard requirement	试验结果 Result	详注 Note	备注 Note
1KV 户内户外终端及中间连接 1KV outdoor indoor terminal and intermediate joint	1	1min 工频耐压试验 1min withstand voltage test	4KV（户内终端） 4KV（户内终端） 不闪络、不击穿	4KV/1min 未闪络、未击穿 No flashover	通过 Pass	武高所试验
	2	负荷循环试验 (3次循环) Test	5h 加热，3h 冷却，加热时导体温度75℃	同左	由以下试验评定	
	3	4h 工频耐压试验 4h withstand voltage test	2.4KV 不闪络、不击穿 2.4KV no flashover no breakdown	2.4KV/4h 未闪络、未击穿 2.4KV no falshover no breakdown	通过 Pass	

1KV 塑力终端连接安装程序

1KV Mold power terminal connecting installation procedure

1、剥除电缆外护套：量取电缆拉直长度600mm，剥除电缆外护层。留50mm铜钢，剥除550mm的钢铜及内垫层。

2、安装支套：分开芯线，将指套牢牢套至根部，然后从中间向两端加热，使其完全收缩。

注：若是（3+1）芯、（4+1）芯、（3+2）芯电缆，则应先在地线端套入两根或一根垫管，加热收缩后再套入指套。

3、安装端子：在芯线末端量取端子7L深加5mm长度，剥除线芯绝缘然后压接端子，用锉刀或砂纸抛光端子表面，擦拭干净。

4、安装绝缘管：清洁线芯绝缘表面和指套，套入绝缘管，使绝缘管的下端搭接指套根部，上端包住端子的压痕，然后由下向上加热直至绝缘管完全收缩。

1.Peeling cable outer protection sleeve:measure 600mm length cable.Peeling cable outer protection layer, remain 50mm copper steel,peeling 550mm copper steel and inner pad layer.

2.Install branch sleeve:

Separate core wire, sheathed finger sleeve to the root, heating from middle to two ends, fully shrinked.

Note:If(3+1)core,(4+1)core,(3+2)core cable,sheathed earthingwire with two orone padthbe,sheathed with fingerafter heating shrinkable.

3.Install terminal:measure5mm terminal in the end of core wire, pressingconnect terminal after peel wirecore insulation, smoothing the terminal surface with knife or sand paper, wipe clearly.

4.Install insulation tube : Cleaning the wire core insulation surface and finger sleeve, sheathed with insulation tube. To make the below terminal of insulation tube join the root of finger sleeve, wrap the pressing traces, and heating from below to top till the insulation tube.

1KV 塑力电缆热缩中间连接安装程序

1KV Mold power cable heat shrinkable intermediate link installation procedure

1、切电缆外护套和线芯绝缘

a. 将电缆两端重叠约12mm， 在重叠部分的中心作一记号，在记号处锯断，分别量取500mm和300mm，剥除外护套。

b. 保留 50mm 的钢铠铠装和10mm的内垫层， 依次剥除电缆末端的钢铠铠装、内垫层。

c. 从电缆末端量取1/2连接管长加 5mm，切去线芯绝缘。

1. Cut off the cable outer protection sleeve and wire core insulation.

a. Refold 120mm two ends ofcable, Mark asign in the central,cut off in the mark position, measure 500mm and 300mm in turn, peeling outer protection sleeve

b. Remain 50mm copper armor and 10mm innerpad layer, peeling steel armor inner pad layer of cable end in turn.

C.Measure1/2 connecting tube length and 5mm from cable end, cut off wire core insulation

2、压接连接管

a. 在电缆长端分别套入护套管和四根绝缘管， 清洁电缆的四根线芯导体和压接管，用砂纸擦去压接管内的氧化层。

b. 将两端电缆的线芯绝缘的颜色 对套入压接管的两端， 然后压接，用锉刀或砂纸将连接管表面压痕打光，清洁表面，矫直电缆。

2. Press conneeting link tube

a. Sheathed protection sleeve and four insul ation to cable ends, cleaning cablefour-corewire conductand pressingconnectingtabe, wipe off oxidate layer of pressing connectingtabe withsand paper.

b. Sheathed wlre core insulationscolor of two ends cable to the two end s of pre ssing connecting tab e, then pressing cormeclion, smoothing connecting tube surfoce with knife and sand paper, cleaning surface, corrected cahle.

3、安装绝缘管

a.用填充胶将压接管两端与线芯绝缘的连接部分填平。

b.将四根绝缘管从长端拉到中间，盖住压接管， 从中间向两端依次加热绝缘管，火焰要适中，四周均匀加热，直到完全收缩。收缩完后应有少量热熔胶溢出。

3. Install insulation tube

a. Making level up connecting pans ofpress connectingtubetwo ends and wirc corc insulation with filling adhesive.

b. Pulling four insulation tube from long end to middle, covering press connection tube, heating insulation tube from middle to two ends, proper flamc, uniformly heating until fuIly shrirk,There are few hot-glue overflow after fUlly shrink

4、安装外护套管和地线

a. 将地线的两端分别焊接在两端电缆的铠装层上。

b. 矫直电缆，将线芯扰在一起，用塑料带绑车。

c. 将护套管拉到中间，从中间向两端加热，直到收缩完全。至此安装完毕。

4. Install outer protection sleeve and earthing wire.

a. Welding the two ends of earthing wire to the armored layer of two ends cable.

b. Correct straighl cable tied wire core together with plastic tape.

c. Pulling the protection sleeve to the middle,heating frommiddle to two ends until fully shrink till installl finished.

10KV 交联电缆户内、外终端和中间连接

10KV cross-linking cable indoor outdoor terminal and intermediate link

朋友热缩的中压产品广泛应用于 6KV-10KV 交联电缆 的末端处理和中间连接， 可分为单芯、三芯等产品。户内终端安装的推广开距为650mm.根据用户的不同需要还有开距 800mm、1000mm 的产品；户外终端安装的推广开距为650mm，但根据用户的不同需要还有开距 800mm、1000mm的产品。

Pengyou heat shrinkable middle-Voltage product is suitable for the end dealing and intermediate link of 6KV-10KV cross-linking cable. The product are classified single core, three cores, The distance is 650mm for the indoor terminal installation. Ithas 800mm,1000mmaccordancewith the demands of user. The distance is 650inm for outdoor terminal installation. It has 800mm, 1000mm aceordance with the demands of user.

●产品规格型号 Product specification

产品名称 Name	型号规格 Type	适用电缆截面 Section
10KV 户内交联三芯终端 10KV indoor cross-linking three-cores terminal	NSY-10/3.1	25-50
	NSY-10/3.2	70-120
	NSY-10/3.3	150-240
	NSY-10/3.4	300-500
10KV 户外交联三芯终端 10KV outdoor cross-linking three-cores terminal	WSY-10/3.1	25-50
	WSY-10/3.2	70-120
	WSY-10/3.3	150-240
	WSY-10/3.4	300-500
10KV 户内油浸三芯终端 10KV indoor oil-dipped three cores terminal	NSZ-10/3.1	25-50
	NSZ-10/3.2	70-120
	NSZ-10/3.3	150-240
10KV 户外油浸五芯终端 10KV outdoor oil-dipped three cores terminal	WSZ-10/3.1	25-50
	WSZ-10/3.2	70-120
	WSZ-10/3.3	150-240

产品名称 Name	型号规格 Type	适用电缆截面 Section
10KV 中间交联三芯接头 10KV intermediate cross-linking three cores plug	JSY-10/3.1	25-50
	JSY-10/3.2	70-120
	JSY-10/3.3	150-240
	JSY-10/3.4	300-500
10KV 中间油浸三芯接头 10KV intermediate oil-dipped three cores piug	JSZ-10/3.1	25-50
	JSZ-10/3.2	70-120
	JSZ-10/3.3	150-240

●产品技术指标 Product technical index

项目	试验项目	标准要求	试验结果	详注	备注
10KV 户内户外终端及中间连接	1 工频耐压	4KV 1min 不闪络、不击穿	45KV 1min 未闪络、未击穿	通过	武高所试验 (户内黑色管氧指数为32 红色管氧指数为30)
	2 局部放电试验	13KV≤20pC	13KV 8pC	通过	
	3 负荷循环试验 3 个周期	5h 加热时，3h 冷却，加热时，导体温度高为95℃	导体温度为95℃ 由以下实验评定		
	4 局部放电试验	13KV≤20pC	13KV 10pC		
	5 击冲点压试验 1.2/50us 正负极性各一次	105KV 正负极性各允许闪络一次，但不计入总试验次数	105KV 末闪络、未击穿	通过	
	6 直流电压试验负极性	52KV/15min 不闪络、不击穿	52KV/15min 不闪络、不击穿		
	7 4h 工频电压试验	35KV 4h 不闪络、不击穿	35KV 4h 不闪络、不击穿	通过	

35KV 交联电缆户内、外终端

35KV cross-linking cable outdoor, indoor terminal

朋友热缩的中压产品应用于35KV交联电缆的末端处理。

Pengyou shrink middle voltage products is suitable for the end dealing of thc 35KV cross-linking cable.

●产品规格型号 Product technical inder

产品名称 Name	型号规格 Type	适用电缆截面 Section
35KV 户内交联单芯终端 35KV indoor cross-linking single-core terminal	NSY-35 /1.1	50-120
	NSY- 35/1.2	150-300
35KV 户外交联单芯终端 35KV outdoor cross-linking single-core terminal	WSY-35/1.1	50-120
	WSY-35/1.2	150-300
35KV 户内交联三芯终端 35KV indoor cross-linking three-cores terminal	NSY-35/3.1	50-120
	NSY-35/3.2	150-300
35KV 户外交联三芯终端 35KV outdoor cross-linking three-cores terminal	WSY-35/3.1	50-120
	WSY-35/3.2	150-300

●产品技术指标 Product technical index

项目	试验项目	标准要求	试验结果	详注	备注
35KV 户内户外终端	1 工频耐压	105KV 不闪络、不击穿	105KV1min 未闪络、未击穿	通过	武高所试验
	2 局部放电试验	39KV≤10pC	39KV≤10pC		
	3 负荷循环试验 3 个周期	5h 加热时，3h 冷却，加热时，导体温度高为95℃	同左	通左	
	4 局部放电试验	39KV≤10pC	39KV 10pC	通过	
	5 击冲点压试验 1.2/50us 正负极性各一次	25KV 不闪络、不击穿	250KV ± 10次 未闪络、未击穿	通过	
	6 直流电压试验负极性	156KV 不闪络、不击穿	156KV/15min 未闪络、未击穿	通过	
	7 4h 工频电压试验	104KV 4h 不闪络、不击穿	35KV/4h 未闪络、未击穿	通过	

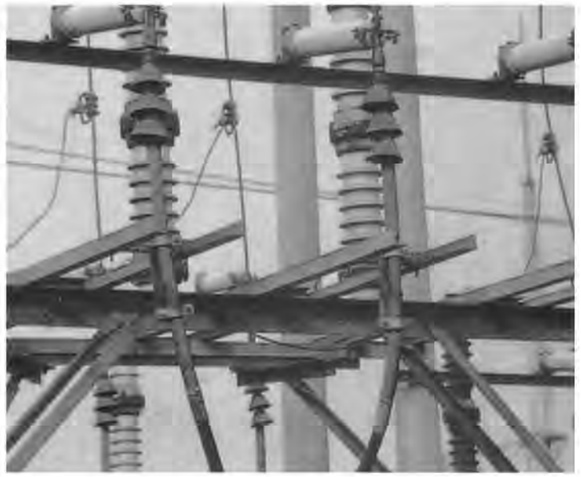

10KV 交联电缆热缩型户内、外终端连接安装程序

10KV cross-linking cable heat shrinkable outdoor indoor terminal connecting installation procedure

1.剥外护套及铜铠：用电缆夹将电缆垂直固定，户外头剥去外护套650mm，户内头剥650mm。留铜铠30mm。绑扎线 剥除其余铜铠。

1.Remove the outcoverprotection coverand copperarmor:fixingthe cable with cable cIip:renlove the oulcover protection cover 650mm in the outdoor as welI as remove 650mm indoor retain 30mm copper armor, tighten with thread relllove the other copper armor.

2.剥内护层、分芯线、焊接地线、绕包填充胶：铜铠断口处保留 20mm 内护层，其余剥除。切掉填充物，分开芯线。用砂纸将钢铠焊地线区打光，将地线分别焊在铜屏蔽和钢铠上。用填充胶填平钢铠断口处。钢铠焊地线区包在填充胶内。

2.Remove inner protection layer, class ified the core wire, welding earthing wire, sealingglue:retain 20mm inner protectionlayer, remove the others, cut off the falling matter, separeted the core wire, smooth thesteelarmorwelding earthing wire with sand paper,weld the earthing wire into copper shield and steel armor, filling the crack place with filling glue, wrap the steel armor earthing wire in the filling glue, sealing glue wind around the protection cover crack place.

3.固定三芯指数：将三芯支套套入三叉根部，往下压紧，由中间向两端加热固定。

3. Fixing three-coresindex: put thethree-cores branch coverinto the three fork root,beneathpress,heating andfixing frommiddle to both side of terminal.

4.剥铜屏蔽层、半导层：从支套指端向上量取 50mm铜屏蔽层，其余剥除，保留 20mm半导层，其余剥除。清理绝缘表面。

4. Remove copper shield and semiconductor, 1ayer,measure 50mm copper shield layer from the branhcover fingerterminalremovethe othcrs, retain 20mm semiconduct layer, removcthe others.cleaning the insulation surface.

5. 固定应力控制管、压接端子：将应力控制管套入绝缘芯线，搭接 20mm 铜屏蔽，加热固定。在芯线端部剥去长度为端子深加 5mm的绝缘层，压接端子。

5. Fixing press controlling tube, press connecting terminal: put the stress controllingtube into theinsulation coreline with20mmcopper shield, heating and fixing. In the end of core terminal: remove the 5mm insulation layer, press joint the interminal.

6. 包绕填充胶：在三芯支套指端 包绕填充胶，用填充胶填平金属端子压接处和线芯绝缘连接处，搭接端子和线芯绝缘各10mm

6. Wind around the sealing glue: wind around the sealing glue in t-he three cores branch cover finger terminal: filling thepress conne-ting place ofmetal terminal and conneting place of wire core join-ting : terminal and wire core insulatlon each 10mm.

7.固定绝缘管：在绝缘层表面涂硅脂膏，将绝缘管套在三叉根部，从下往上加热固定。

7. Fixing insulation tube: Scribble the surface layer of insulation, put the insulation cover in the root of three fork, fixing and heating from the below to top.

8.固定密封管和相色管、固定伞裙：将密封管套人接线端子外，加热固定。将相色管分别套在相应芯线上，加热固定。户内终端头安装完毕。将三孔伞裙套入，在距三叉口 100mm 处加热固定，依次套入孔伞裙，各伞裙间距约为 150mm，加热固定，户外终端头安装完毕。

8. Fixing sealing tube and insulationskirt: put sealingtubein theout of the connecting wire terminal, heating and fixing, put the tube in the cone wire, heating and fixing indoor terminal are finished Put the three hole skirt, heating and fixing from the three fork 100mm , put into hole skirt in turn, about 150mmbetween each skirtdistance, fixing and beating. The installation of outdoorterminal are finished.

10KV 交联电缆热缩型中间连接安装程序

10KV cross-linking cable heat shrinkable intermediate link installation procedure

1.校直电缆:将电缆2米内校直，重叠200mm，从中心锯断。

1. Correct Cable; Straight two meter cable overlap 200mm, cut off from the center.

2.剥护套、钢铠：按附图1尺寸剥除外护套，距护套剖 40mm处绑扎钢铠，打光，绑线以上钢铠剥除。

2. Remove protection cover steel armor: based on the pictu re, one size remove outcover protection tied steel armor away from400mm protection cover rip position smooth tied, remove steel armor.

3.剥内衬层和相间填充物：保留 10mm内衬层，用PVC带绑扎，其余剥除，剥除的相间填充物保留备用。

3. Remove inner layer and interval filling matter: retain lomm inner layer tied with PVC belt, remove others, retain the filling matter of renloved

4.剥除铜屏蔽带：从中心向两端各量取 250mm铜屏蔽带，用PVC带绑扎后剥除.

4. Peel copper shield belt: measure 250mm copper shield belt from the center to both size of terminal, peeling after tied with PVC belt.

5.剥除半导体屏蔽层：由铜屏蔽带剖口起保留50mm 半导体屏蔽层，其余剥除，不得损伤主绝缘。

5. Peeling semi conduct shield layer: retain 50mm semiconductor shield from the copper shield belt peeling position, remove others without damage main insulation.

6.剥主绝缘，绕包压力带：除去 1/2去连接管长加 5mm 端部主绝缘，压半导体层 30mm绕包 70mm长压力带两层。

6.Peelingmainlyinsulationwrappedbelt:removel/2 connectingtuke with 5mm terminal mainly insulation semiconductor 30mm coiled with two layer of press belt.

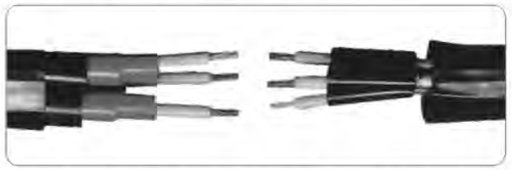

7.套管件：按附图l所示，A，B两端各套入一根护套管，三组内绝缘管、外绝缘管、外半导电管套入长端三相，三根内半导电管套入短端三相。

7. Cover tube: based on picture. Tied the a mateh protection tube in each A.B terminal,three setsinner insulationtube, outerininsulation tube, outersemiconductelectric tied withlong terminalthreematches semiconduct tube tied wlth short terminal.

8.压接连接管：压接连接管，每相压接点不少于四点，锉平棱角和毛刺。

8. Press connecling link tube: Press conneting link tubeeach no less than four points smooth the edges and corners and thorn.

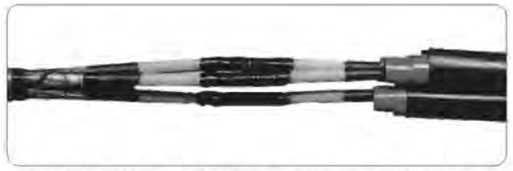

9.安装内半导电管：王绝缘和连接管间隙用半导电带缠平，拉出内半导电管置于正中加热收缩。

9. Install innersemiconductelectric tube:wind aroundspacebetween main insulation and connecting tube with simiconduct electric belt, pulling inner semicondut eIeclric tube placed itin the centerheating and shrinkable.

10.安装内绝缘管：从A端拉出内绝缘管置于正中加热收缩。

10. Install inner insulation tube: Pulling inner insulation tube from A point placed it in the centrel heating and shrinkable.

11.安装外绝缘管厦端部处理：趁热清洁内部绝缘管表面，拉出外绝缘管置于正中加热收缩，两端用 J-20自粘带缠绕均匀过渡。

11.Install outer insulation tabe and terminal dealing: pulling onter pisulation tube, placed il in the lentral during cleaning the inner insulation surface,wind around theboth end withJ-20 self-adhesive belt.

12.安装外半导体电管及端部处理：从 A端拉出外半导电管置于正中加热收缩。其两端用半导电带绕包，并与铜屏蔽带和外半导电管各搭接20mm。

12. Install outer semiconduct electric tube and end dealing: pulling outer semiconduct electric tube from A and placed it in the center, heatingand shrinkablewindaroundtwoendswith semicondutelectric belt copper screen and onter semiconduct electric tabe, each joints 20mm.

13.绕包铜屏蔽网：从 A 端到B 端分相用铜屏蔽网绕包， 并焊牢在铜屏蔽带上。

13. Wind around copper screen net: wind around with copper screen net from A end to B end. Welding in the copper screen belt.

14. 恢复内衬层：恢复相间填充物，收扰三相用白布带绑扎。从 A 端至 B端用 J-20 自粘带缠绕恢复内衬层。

14. Recover inner layer: recover filling matter wind around wilh white belt. Recover inner layer, recover inner layer with J-20 self-adhesive from A end toB end.

15.焊地线：将地线在 A 端钢铠上焊牢，缠绕至 B 端并焊牢在钢铠上。

15. Welding earthing wire: welking earthen wire in the A end steel armor, wind around to the B end then welking in the steel armor.

16.恢复外护套及端部密封： 打毛， 清净 A、B 两端 电缆护套 100mm，绕包热熔胶至钢铠上，缩 A 端护套；离 A 管接口100mm 内缠绕热熔胶， 缩 B 端护套。

16. Recover outer protection sleeve and end sealing: Cleaning A ,B two ends cablc protection sleeve 100mm, arownd the hot glue tothe steel armor, contract A end protection sleeve,wind around hot glue a act B end protection sleeve.

1.内绝缘管
2.外绝缘管
3.内半导电管
4.外半导电管
5.外护套管
6.半导电自粘带
7.绝缘自粘带
8压力控制带
9.热熔胶带
10.铜屏蔽网
11.地线
12.白布带
13.手套

1.Inner insulation tube
2.Outer insulation tube
3.Inner semiconduct
4.Outer semiconduct electric tube
5.Outer protection sleeve
6.Semieonduct self-adhesive belt
7.Insulation belt
8.Press controlling belt
9.Hot glue belt
10.Copper screen net
11.Earthing wire
12.White belt
13.Glove

1KV 10KV 35KV 母排阻燃绝缘热缩套管

1KV 10KV 35KV Bus-bar Antiflaming insulation heat shrinkable sleeve

●1KV 母排阻燃绝缘热缩套管

1KV bus-bar antiflaming insulation heat shrinkable sleeve

型号/规格 Type specification	适用线排宽度 Width of bus-bar (mm)	收缩前（mm） before shrink		收缩后（mm） after shrink	
		内径 I.D	壁厚 wall thickness	内径 I.D	壁厚 wall thickness
KZRSG-25	20	25	0.45	10	0.9
KZRSG-30	30	30	0.45	14	0.9
KZRSG-40	40	40	0.5	18	1.0
KZRSG-50	50	50	0.5	22	1.0
KZRSG-60	60	60	0.5	28	1.0
KZRSG-70	70	70	0.5	28	1.0
KZRSG-80	80	80	0.5	33	1.0
KZRSG-90	100	90	0.5	40	1.0
KZRSG-100	120	100	0.5	40	1.0
KZRSG-120	140	115	0.5	40	1.0
KZRSG-140	160	135	0.5	55	1.0
KZRSG-150	180	155	0.5	55	1.0

注：每根 25米（50米），颜色：红、黄、绿、兰、黑。

●10KV 母排阻燃绝缘热缩套管

10KV bus-bar antiflaming insulation heat shrinkable sleeve

型号/规格 Type specification	适用线排宽度 Width of bus-bar (mm)	收缩前（mm） before shrink		收缩后（mm） after shrink	
		内径 I.D	壁厚 wall thickness	内径 I.D	壁厚 wall thickness
KZRSG-25	20	25	1.0	10	2.0
KZRSG-30	30	30	1.0	14	2.0
KZRSG-40	40	40	1.1	18	2.4
KZRSG-50	50	50	1.1	22	2.4
KZRSG-60	60	60	1.1	28	2.4
KZRSG-70	70	70	1.2	28	2.7
KZRSG-80	80	80	1.2	33	2.7
KZRSG-90	100	90	1.2	40	2.7
KZRSG-100	120	100	1.2	40	2.8
KZRSG-120	140	115	1.2	40	2.9
KZRSG-140	160	135	1.2	55	2.7
KZRSG-150	180	155	1.2	55	2.9

注：每根长度 1米，颜色：红、黄、绿。

●35KV 母排阻燃绝缘热缩套管

35KV bus-bar antiflaming insulation heat shrinkable sleeve

型号/规格 Type specification	适用线排宽度 Width of bus-bar (mm)	收缩前（mm） before shrink		收缩后（mm） after shrink	
		内径 I.D	壁厚 wall thickness	内径 I.D	壁厚 wall thickness
KZRSG-25	20	25	1.4	10	3.0
KZRSG-30	30	30	1.4	14	3.0
KZRSG-40	40	40	1.5	18	3.4
KZRSG-50	50	50	1.5	22	3.4
KZRSG-60	60	60	1.5	28	3.4
KZRSG-70	70	70	1.6	28	3.7
KZRSG-80	80	80	1.6	33	3.7
KZRSG-90	100	90	1.6	40	3.7
KZRSG-100	120	100	1.6	40	3.7
KZRSG-120	140	115	1.6	40	3.9
KZRSG-140	160	135	1.6	55	3.7
KZRSG-150	180	155	1.6	55	3.9

注：每根长度 1米，颜色：红、黄、绿。

名称 Name	接头适用规格 Specification	名称 Name	接头适用规格 Specification	名称 Name	接头适用规格 Specification
T型接头盒 T-shape joints box	20×2	L型接头盒 L-shape joints box	20×2	I型接头盒 I-shape joints box	20×2
	20×3		25×3		25×3
	30×3		30×3		30×3
	40×4		40×4		40×4
	60×6		60×6		60×6
	80×8		80×8		80×8
	100×10		100×10		100×10
	120×12		120×12		120×12

说明：各种接头盒是以单板相接设计的，特殊接头盒可根据用户提供的形状、尺寸加工。
illustration: various joints box was designed with single plate connecting.

热缩母排保护套管

Heat shrinkable bus-bar protective sleeve

●说明

所有的母排绝缘热缩管、片、及非热缩型的典型制品、接头盒均为交联法制备的聚烯烃材料。该类材料具有良好的热稳定性、阻燃眭、柔软眭、不龟裂性及耐电痕性，并且有优良的电学性质，能够满足各种开关柜的工程绝缘要素，广泛用于变电站及高低压开关柜母排的绝缘保护。

Descriptions

The connection box of all the bus insular pyroconder tubes, places and the non-pyrocondensativespecialproductsare madeftom playolefinerwhieh is made through crosslinking method.This kind of material has goodheat stabiIity flame resistance, softness, non-crackness andtracking resistancewellas goodelectricperformances, thus can meet theenig neeringinsulat requirementof various switcb cabinets.

●解决问题

1、增加绝缘，防止小动物短路事故；
2、防凝露闪络，防污秽闪络：
3、防止维护人员误入带电间隙：
4、增强开关柜相间绝缘眭能，有效缩小开关柜体积；
5、复难电器接点特殊防护，防止异物搭接；
6、综台防腐。

Solve problem

1. Increase insulation, prevention short circuit aceident caused by small animal
2. Prevention from dew and dirty water flashover
3. Prevention mainterance pcrsonal when entering electrophorus clearance by mistake.
4. Increase the insulation performance ofswitch cabinetcontractthe volume of switch cabinet.
5. Protection electricequipmentjoints,preventionfrom foreignbody joint.
6. Anti septic.

●产品性能 Product performance

1、热缩材料用于变电站交流母排，不会影响母排的温升；
2、热缩材料电气性能：Heatshrinkablematerial electricperformance
(1) 击穿强度：30kV/mm Breakdownstrength:30kV/mm　　通过 pass
(2) 工频耐压：42kV/1min Withstandvoltage:42kV/1min　　通过 pass
(3) 雷电动击：75kV±15次 Strlke: 75kV±15time　　通过 pass
3、热缩材料无氯、低卤、低烟、阻燃，具有良好的离火自熄眭能（氧指数≥30）；
4、热缩材料具有良好的耐老化性能。（热老化寿命可达20年）
5、热缩材料具有良好的耐温性能，在120℃温度条件下，不滴流，可满足电力设备的长期运行需要。

●技术指标

性能 Performance	测试项目 ITEM	技术指标 Index 阻燃型	技术指标 Index 一般型
电性能 Electric performance	击穿强度（kV/mm)Breakdown strength	≥30	≥30
	工频耐压（kV/mm) Withstand voltage	42	42
	行击耐压（kV、peak) Wistand voltage	75	75
	体积电阻率 (Ω. cm) Volume specific resistance	$\geq 1.0\times10^{15}$	$\geq 1.0\times10^{13}$
	介电常数 Dielectric	≤2.9	≤2.9
	动稳电流（kA, peak) Move stability current	59.3	59.3
	热稳电流（kA) Heat stability current	31.5	31.5
收缩性能 Shrinkable performance	起始收缩温度 (℃) Shrinkable temperature	60	90
	完全收缩温度 (℃) Shrinkable temperature	105	120-130
	径向收缩率 (%) Radial shrinkage rate	≥50	≥50
化学性能 Chemical property	氧指数 Oxygen index	≥30	-
	吸收率 (%) Absorption rate	≤0.1	≤0.1
	低温性 (-55±2° c4) Low-temperature	不裂不脆	不裂不脆
物理性能 Physical property	抗张强度（mpa) Tension resistance strength	≥12	≥14
	断拉伸长率 (%) Break extension rate	≥600	≥400
	加速老化试验 Agimg test	168℃, 7d.通过	168℃, 7d.通过

热缩端帽
Heat shrinkable end cap

电力电缆端头密封，通信电缆端头非充气密封；
通信电缆端头充气密封，其它工业管路密封；
内涂高性能热熔胶，可配用于充气检测的气门；
聚乙烯护套和铅护套电缆等形式均适用。

Power cable and scaling communication cable and flatable scaling Communication cable end inflatable sealing, other industries pipe sealing
The interior paint is high -performance hot glue, which m ay be collocated to the spiracle for air charging test.
The forms such as polyethylene sheathed cable and lead-sheathed Cable and so on are all suitable

●规格 -览表

型号及规格 Type Size	适用电缆的最小外径 O.D (mm)	适用电缆的最大外径 Max.O.D (mm)	型号及规格 Type Size	适用电缆的最小外径 O.D (mm)	适用电缆的最大外径 Max.O.D (mm)
RSM,RSMQ-20/8	8	15	RSM,RSMQ-120/65	65	115
RSM,RSMQ-30/12	12	25	RSM,-140/65	65	130
RSM,RSMQ-40/15	15	35	RSM,165/65	65	150
RSM,RSMQ-56/20	20	50	RSM,160/90	90	150
RSM,RSMQ-66/25	25	60	RSM,180/90	90	175
RSM,RSMQ-78/30	30	72	RSM,200/90	90	195
RSM,RSMQ-100/45	45	95			

a.砂毛电缆外护套，并清洁电缆，之后套上电缆端帽。
a. Sand feather cableprolection sleeve,sheathed cable end cap after clean the cable

b.加热热缩端帽，使其收缩在电缆端部，注意顺序。
b. Heating heat shrinkable end cap, shrenked in the end of cable, noticed the order

C.热缩端帽收缩充分，胶液均匀溢出为止。
c. Heat shrinkableend capwas shrinked until glueliquid overflow uniformly.

辐射交联热收缩管
Radiation cross-linking heat shrinkable tube

低温阻燃热收缩管
收缩率：径向收缩率>50%
轴向收缩率<10%
标准颜色：黑色
收缩温度：90℃
工作温度：-55℃ ~ +1 25℃
产品标准：UL224(E14241 5)
CSA22 2(LR108142-1)

Low-temperature flame resistance heat shrinkage Tate
Shrinkage rate: Radial shrinkage rate~50%
Shrinkage rate <10%
Standard color: black
Shrink temperature: 90℃
Work temperature:-55℃～+125℃
Products standard: UL224(E 142415)
CSA22.2(LR 108142-1、

●规格 Specification

标称规格(mm) Specification	收缩前内径最小值I.D	收缩后内径最大值 O.D	收缩后最小壁厚 thickness wall	标称规格(mm) Specification	收缩前内径最小值I.D	收缩后内径最大值 O.D	收缩后最小壁厚 thickness wall
1.00	1.3±0.3	0.50	0.30	13.0	13.5±0.4	6.5	0.66
1.50	2.0±0.3	0.75	0.30	14.0	14.5±0.4	7.0	0.68
2.00	2.5±0.3	1.00	0.40	15.0	15.5±0.4	7.5	0.68
2.50	3.0±0.3	1.20	0.42	16.0	16.7±0.5	8.0	0.68
3.00	3.5±0.3	1.50	0.44	18.0	18.7±0.5	9.0	0.76
3.50	4.0±0.3	1.75	0.44	20.0	20.7±0.6	10.0	0.89
4.00	4.5±0.3	2.00	0.44	22.0	23.0±0.6	11.0	0.89
5.00	5.4±0.3	2.50	0.54	24.0	25.0±0.8	12.0	0.89
6.00	6.4±0.3	3.00	0.56				
7.00	7.7±0.3	3.50	0.56				
8.00	8.4±0.4	4.00	0.58				
9.00	9.4±0.4	4.50	0.60				
10.00	10.4±0.4	5.00	0.60				
11.00	11.4±0.4	5.50	0.60				
12.00	12.4±0.4	6.00	0.60				

●性能(UL224标准) Performance

性 能	Performance	测试条件 Test condition	指 标 Index	实测 figure
机械性能	Machinery			
抗张强度	Tensile strength		≥10.3MPa	13MPa
断裂伸长率	Break extension rate		≥200%	450%
低温韧性	low-temperature tenacity	-10℃/1小时	无裂纹 No crack	无裂纹 No crack
热冲击性能	heat shock	136℃/1小时	无裂纹 No crack	无裂纹 No crack
加速热氧老化性能	Heat aging			
抗张强度	Tensile strength	158℃/168小时	保留70%以上 Keep up to 70%	12MPa
断裂伸长率	Elongation atrupture	158℃/1681小时	>100%	400%
电性能	Electric			
耐电压	Withstand voltage		无击穿 without breakdown	无击穿 without breakdown
体积电阻率	volume resistance rate		$>10^{14}\Omega$.cm	$>10^{15}\Omega$.cm
化学性能	chemistry			
铜腐蚀	copper corrion	158℃/168小时	无腐蚀 No corrode	无腐蚀 No corrode
铜稳定	copper stability	158℃/1681小时	伸长率 >100%	>200%
燃烧性能	inflamnation	UL V W-1	通过 pass	通过 pass

热缩爬距增长器

Heat-shrinkable ereep distance enhance implement

●应用 Application

线路绝缘子在污秽等情况下的闪络是造成停电事故的主要原因之一，热缩爬距增长器适用于各种户外棒式支柱绝缘子、绝缘套管、开关及其它高压电力设备，增大爬电距离，能够防止污水流形成，从而提高整个系统的抗污闪能力。

The main reason of power failure was caused by the flash of line insulation in the dirt condition. The products is suitable for outdoor stri ck-type support insulator, insulation sleeve switch and other high -voltage electric power equipment, enlarge creep electric distance can prevent dirt water, improved thedirt andflashresistanceabilityof wholesystem.

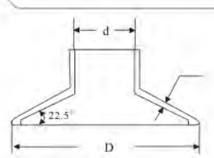

●特点 Feature

抗老化、耐电痕、性能稳定、安装方便。

Aging-resistance Electric tracing-resistance Stability-performance Easy installation.

●材料性能 Material peformance

项目 Item	参数数据 Reference		
电气性能 electric performance	击穿强度	Breakdown strength	30KV
	体积电阻率	Volume resistivity	$>10^{14}\Omega.cm$
	介电常数	Dielectric constant	4.0(max)
	相比漏电起痕指数	Index	525V
物理性能 physical performance	拉伸强度	Tensile strength	>8MPa
	断裂伸长率	Break extension strength	>400%
	耐低温脆性	Low temperature	-40℃
	吸水率	Water-sorption rate	0.37%
加速老化 aging	168h at 120℃, $K_1>0.9$, $K_2>0.9$		20年

●产品规格型号 Product specificatron

产品及规格 Type	直径（±10%）						适用电缆 Applicable cable
	出厂尺寸 Size			收缩后			
	D	d	(±30%)	D	d	&	
RSS1-32/15		≥30	1.8		≤16	3.0±0.4	10KV 电缆 10KV Cable
RSS1-40/17		≥38	2.0		≤18	3.0±0.4	
RSS1-45/24		≥43	2.2		≤24	3.0±0.4	
RSS1-60/38	140	≥58	2.3	140	≤38	3.0±0.4	35KV 电缆 35KV Cable
RSS1-70/38	140	≥68	2.2	140	≤38	3.0±0.4	
RSS1-80/38	140	≥78	2.0	140	≤38	3.0±0.4	
RSS1-90/38	140	≥88	1.8	140	≤38	3.0±0.4	
RSS1-100/45	200	≥98	2.2	200	≤48	3.4±0.4	220KV 及以下
RSS1-120/45	200	≥118	2.0	200	≤48	3.4±0.4	
RSS1-140/55	270	≥135	2.4	270	≤55	4.0±0.4	
RSS1-200/80	360	≥188	2.2	360	≤66	4.0±0.4	
RSS1-240/110	430	≥238	3.5	430	≤120	5.0±0.4	
RSS1-450/200	560	≥448	3.5	560	≤190	6.0±0.4	

热缩爬距增长器安装方法

Heat-shrinkable ereep distance enhance implement methods of installation

●以100KV 普通支柱绝缘子为例 Take the 110KV common pillar insulatorfor example

1.用抹布将整个绝缘子擦干净，然后用清洗纸将绝缘子需加装爬距增长器的瓷裙及其颈部擦洗干净。

1. Erasing the whole insulator cleanly, then with purge paper erasing the porcelain skirt and its neck of the insulator with creepdistance enhance implemts.

2. 用弹性密封胶均匀包绕该瓷裙颈部。

2. Wrap porcelain skirt neck with resilience sealing glue

3. 将爬距增长器套至预热后的瓷裙处，使其上口与瓷裙沿持平，然后均匀加热，使其收缩箍紧瓷裙。

3. After healing put the creep distance enhance implements to the uphole skirt, keep equal with porcelain skirt adge, then heating, tighten the porcelain skirt.

4. 将增爬器伞沿面上的扩张痕迹加热烤平，使其成一平滑斜面，单个爬距增长器安装完毕。

4. Heating the expand trances of the creep enhance-implements became a smooth incline plane, single creep distance enhance implelnent was finished.

5. 可根据需要用同样的方法安装另一只的爬距增长器。

5. Accordingtheneedsinstallation another creep distance enhance implement in the salne way.

6. 安装完爬距增长器后的支柱绝缘子。

6. The pillar insulator after finishedofcreep distanceenhance ilnplement.

热缩应力控制管

Heat shrinkable stress controlling tube

朋友热缩的应力管是电缆附件的核心部分，主要起应力分散作用。

Pengyou heat shrink stress tube is the core part of the cable accessories. Its function is pressure scattered

●产品技术指标 Products technical index

序 号 No	内 容 Content		单 位 Unit	指 标 Index
1	硬度	Hardness degree	邵氏 Shao's	≥90
2		Tensile strength	Mpa	≥13
3	断裂伸长率	Elognation at rupture	%	≥300
4		Heat aging 120℃ 168h		K_1>0.8 K_2>0.7
5	体积电阻系数	Volume resistance coeffiicient	Ω.cm	10^8-10^{11}
6		Dielectric strength		≥20
7	收缩温度	Shrink temperature	℃	120-130

●电缆未加装应力控制管前的电力线分布

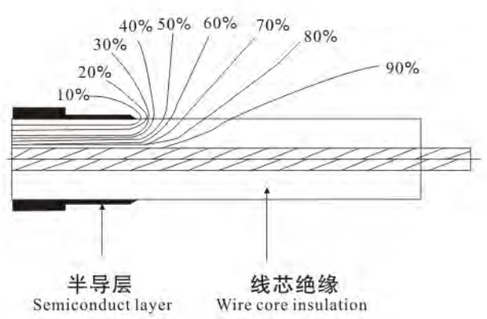

●电缆加装应力控制管后的电力线分布

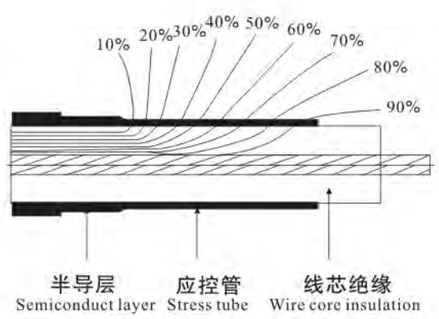

热缩绝缘管

Heat shrinkable insulation tube

朋友热缩的绝缘管具有耐气候老化、抗电碳痕及阻燃等优良特性，作为35KV及以下电缆尸内、外终端的绝缘管。外穿墙套管及电流互感器的绝缘管，该产品不但具有良好的耐环境温度和环境污秽性能，而且具有良好的机械强度，可耐较高的额定电压。

Pengyou heat shrinkable insulation tube has advantage of weather-resistance, aging-resistance, tracing-resistance and antiflaming, As the insulation tube of cabe outdoor, indoor terminal under 35KV. This product not only have good temperature and dirt resistance, but also have good machinery strength and high-voltage raled vollage.

●规格技术指标 Specification technical index

序 号 Order No	内 容 Conternt		单 位 Unit	指 标 Index
1	硬度	Hardness degree	邵氏 Shao's	≥90
2	抗张强度	Tensile strength	Mpa	≥8.0
3	断裂伸长率	Break extension rate	%	≥300
4	热老化120℃ 168h	Heat aging 120℃ 168h		K_1>0.8 K_2>0.7
5	体积电阻系数	Volume resistance coeffiicient	Ω.cm	≥10^{11}
6	击穿强度	Disruptive strength	KV/mm	≥20
7	收缩温度	Shrinkage temperature	℃	120-140
8	耐漏电痕迹电压等级	Voltage class	1A级3.5级	≥3.5
9	氧指数	Oxygen index	OI	≥28

●产品规格型号 Products specification type

型号/规格 Type/Specification	收缩前（mm）Before shrink		收缩后（mm）After shrink	
	内径	壁厚±30%	内径	壁厚
RSWT-30/11	≥28	1.3	≤11	2.7±0.25
RSWT-35/13	≥33	1.3	≤14	2.8±0.25
RSWT-40/15	≥38	1.3	≤18	3.0±0.4
RSWT-45/17	≥43	1.6	≤18	3.0±0.4
RSWT-50/22	≥48	1.6	≤23	3.0±0.4
RSWT-60/22	≥58	1.4		
RSWT-80/27	≥74	1.6	≤30	3.3±0.4
RSWT-100/37	≥94	1.8	≤40	3.7±0.4
RSWT-120/37	≥118	1.4		
RSWT-140/49	≥138	2.0	≤55	5.0±0.4
RSWT-200/66	≥198	2.0	≤70	6.0±0.4

热缩护套管

Heat shrlnkable protective tube

朋友热缩护套管具有良好的绝缘性和抗开裂性,主要用于电缆的外保护层的修补和电缆中间连接的外层保护。

pengyou heat shrink protection covertube hasgood insulatipn and ruptuing resistance. It suitable for mend of cable out-layer protection and outlayer protection ofiintermedialc connecting.

●产品技术指标 Index

序号NO.	内 容 Contents		单位 Unit	指标 Index
1	硬度	Hardness degree	邵氏 Shaos	≥90
2	抗张强度	Tensile strength	Mpa	≥13
3	断裂伸长率	Break extension rate	%	≥300
4	热老化120℃ 168h	Heat aging 120℃ 168h		K_1>0.8 K_2>0.7
5	吸水率	Water alsorption	%	≤0.1
6	体积电阻系数	Volume specific resistance	Ω.cm	≥10^{14}
7	击穿强度	Breakdown strength		≥20
8	收缩温度	Shrink temperature	℃	120-130

●产品规格型号 Product specification

型号/规格 Typer/size	收缩前(mm) Before shrink		收缩后(mm) After shrink	
	内径	壁厚±30%	内径	壁厚
RSBT-15/7	≥14	0.6	≤7	1.7±0.25
RSBT-20/9	≥18	0.7	≤9	1.8±0.25
RSBT-25/9	≥23	0.5	≤9	1.7±0.25
RSBT-30/11	≥28	0.7	≤12	2.2±0.25
RSBT-35/13	≥33	0.8	≤14	2.2±0.25
RSBT-40/15	≥38	0.8	≤16	2.2±0.25
RSBT-45/18	≥43	0.8	≤18	2.2±0.25
RSBT-50/22	≥48	1.2	≤22	2.9±0.25
RSBT-60/22	≥58	1.0		2.8±0.25
RSBT-80/27	≥75	1.0	≤28	3.2±0.4
RSBT-100/38	≥93	1.5	≤39	4.3±0.4
RSBT-120/44	≥118	1.5	≤45	4.5±0.4
RSBT-140/149	≥138	1.9	≤50	5.0±0.4
RSBT-160/66	≥150	2.0	≤67	6.0±0.4
RSBT-200/66	≥195	1.5	≤70	

热缩半导管

Heat shrinkable semiconduct tube

朋友热缩的半导管主要用于连接电缆的半导内屏蔽层。

pengyou heat shrink semiconduct tube is suitable for inner-outsider screen of connecting cable.

●产品技术指标 Products technical index

序号NO.	内 容 Contents		单位 Unit	指标 Index
1	硬度	Hardness degree	邵氏 Shaos	≥90
2	抗张强度	Tensile strength	Mpa	≥13
3	断裂伸长率	Break extension rate	%	≥300
4	热老化120℃ 168h	Heat aging 120℃ 168h		K_1>0.8 K_2>0.7
5	吸水率	Water alsorption	%	≤0.1
6	体积电阻系数	Volume specific resistance	Ω.cm	≥10^{14}
7	击穿强度	Breakdown strength	KV/mm	≥20
8	收缩温度	Shrink temperature	℃	120-130

热缩指套

Heat shrinkable finger sleeve

朋友热缩指套用于电缆分叉处的绝缘和密封保护，有二芯、三芯、四芯、五芯的产品。

pengyou heat shrinkable is suitable for protection of insulation and sealing in fork position.It includes two cores, three cores four cores, five cores.

●产品技术指标 Products technical index

序号 NO.	内容 Contents		单位 Unit	指标 Index	
				绝缘 Insulation	隔油 Space oil
1	硬度	Hardness degreer	邵	≥90	≥90
2	抗张强度	Tensile strength	Mpa	≥11	≥12
3	断裂伸长率	Break extension rate	%	≥300	≥250
4	热老化120℃ 168 168h	Heat aging 120℃ 168		K_1>0.8 K_2>0.7	K_1>0.8 K_2>0.7
5	体积电阻系数	Volume specific resistance	Ω.cm	≥10^{14}	≥10^{14}
6	耐油性 70℃电缆油 168h	Oil resistanle			K_1>0.8 K_2>0.7

●产品规格型号 Products specification

型号/规格 Typer/size	收缩前尺寸(mm) Size of before shrink						自由收缩后尺寸(mm) The size of after shrink						总长 (mm)
	支部 Branch length			基部 Root			支部 Branch length			基部 Root			
	内径 I.D	壁厚±30% Wall thickness	长度 Length	内径 I.D	壁厚±30% Wall thickness	长度 Length	内径 I.D	壁厚 Wall thickness	长度 Length	内径 I.D	壁厚 Wall thickness	长度 Length	
RSJ_2-42/18	16	1.4	60	40	2.4	130	6	2.5±0.25	60	21	3±0.35	140	200
RSJ_2-55/24	22	1.4	60	52	2.4	135	8	2.5±0.25	65	28	3±0.35	145	210
RSJ_2-65/30	28	1.4	60	62	2.6	150	10	2.5±0.25	65	35	3.5±0.35	160	225
RSJ_1-30/12	12	1.2	43	28	2.5	130	4	2±0.25	45	14	3±0.35	135	180
RSJ-50/24	24	1.4	45	48	3.1	145	8	2.5±0.25	50	26	3.5±0.35	150	200
RSJ_3-65/30	30	1.4	50	62	3.2	155	11	2.5±0.25	60	33	3.5±0.35	160	220
RSJ_3-80/38	36	1.6	70	78	3.2	160	13	2.5±0.25	80	39	4±0.35	165	245
RSJ_3-90/40	38	1.7	70	88	3.2	160	18	3±0.25	80	50	4±0.50	165	245
RSJ_3-110/50	48	1.7	70	105	3.4	160	21	3±0.35	80	60	4±0.50	165	245
RSJ_3-145/70	68	1.7	65	142	3.4	160	25	3±0.35	80	70	4±0.50	165	245
RSJ_4-30/12	12	1.3	50	26	2.7	125	5	2±0.25	50	21	3±0.30	130	180
RSJ_4-46/18	17	1.3	60	44	2.3	115	7	2.5±0.35	60	26	3±0.40	120	180
RSJ_4-60/26	24	1.4	60	58	2.3	125	9	2.5±0.35	70	32	3±0.40	130	200
RSJ_4-70/30	30	1.6	70	70	2.6	130	11	3±0.35	75	40	4±0.40	145	220
RSJ_5-65/22	20	1.4	48	62	2.5	125	6	2.5±0.25	55	30	3±0.30	135	190
RSJ_5-80/24	23	1.4	60	75	2.5	130	9	2.5±0.25	65	40	3.5±0.35	135	200
RSJ_5-95/33	32	1.6	55	90	2.5	140	12	2.5±0.50	70	45	3.5±0.35	145	215

注：RSJ--绝缘支套 RSG--隔油支套 N0te:RSJ--insulation branch zleeve RSG-oil-resistence sleeve

热缩复合双壁管

Heat shrinkable compound double-wall tube

朋友的热缩复合双壁管是外层半导、内层绝缘的复合管，主要用于提高电缆连接的可靠性，并能简化安装工艺。

pengyou heat shrinkable compound double-wall tube is compound ofoutlayer semiconduct , inner layer insulation improved the reliable of cable connecting, simplify installation.

●产品技术指示 Products technical index

序号 NO.	内容 Contents	单位 Unit	指标 Index
1	硬度 Hardness degree	邵氏A shao	≥90
2	抗张强度 Tensile strength	Mpa	≥11
3	断裂伸长率 Elognation at rupture	%	≥300
4	热老化120℃ Heat aging 120℃ 168h 168h		K_1>0.8 K_2>0.7
5	体积电阻系数 Volume specific resistance	Ω.cm	半导10^{0-1} semi-condustor 10^{0-1} 绝缘≥10^{14} insulation≥10^{14}
6	击穿强度 Breakdown strength	KV/mm	半导0.5-3 semi-condustor0.5-3 绝缘≥25 insulation≥25
7	收缩温度 Shrink temperature	℃	120-130

●产品规格型号 Products specification

型号规格 Type size	收缩前尺寸(mm) Size of before shirnk				自由收缩后尺寸(mm) The size of afore shirnk			适用电缆截面积(m²) Aoboctor
	外径O.D (±1mm)	内径I.D (±1mm)	总壁厚 thickness (±0.3mm)	半导层壁厚 thickness (±0.1mm)	外径O.D (±1mm)	内径I.D (±1mm)	总壁厚 thickness (±0.3mm)	
RSCBT-30/12	39	33.6	2.8	0.9	23	12	5.5	25~50
RSCBT-40/15	48.4	43	2.8	1.2	27	15	5.8	70~120
RSCBT-45/21	55.2	47.4	4.0	1.2	35	21	6.6	150~240
RSCBT-50/26	59	50.6	4.3	1.5	40	26	6.8	300

硅橡胶系列交联电力电缆附件

Silicon rubber series c ross-linking electric power cable accessory

浙江朋友电力科技有限公司是我国最大的电力金具、电缆附件产品专业生产厂家之一，为了积极配合国家电网建设。公司又开发生产了硅橡胶预制式电缆附件、硅橡胶绝缘件、硅橡胶冷缩式电缆附件、硅橡胶预制式连接器和系列电力电缆分支箱产品。公司引进法国先进的液体硅橡胶注射成型设备、采用德国威凯公司优质的硅橡胶原材料。专业生产各种硅橡胶电缆附件和绝缘件，我们将以优越的产品性能和品质，以及我们优良的售后服务，为您提供最理想的电力电缆附件产品。

Zhejiang friend power technology co., Ltdis one of the largestenterprisesthat specialized inmanufacturing electric power, cable accessory in our country, our company has developed siliconrubber precast cable accessory, silicon rubber insulator, silicon rubber cold shrinkable cable accessory silicon rubber precast connect equipment and electric power cable branch box, our company introduce from Franch REP company of liquid silicon rubber facilites,It with good P roductfunction and quality to you.

预制式户外终端
Precast outcloor terminal

预制式户内终端
Precast indoor terminal

冷缩预制式户外终端
Cold shrinkable precast outdoor terminal

●产品特点 P roduct feature

硅橡胶系列电缆附件可在 -60℃~+200℃温度范围内长期使用能保持其柔软性、高弹性，并具有优异的电绝缘性、憎水性、耐候(抗紫外线)、耐臭氧、耐大多数化学药品及生理惰性、经过特殊配合的硅橡胶预制式电缆附件还具有介电强度高、耐漏痕、抗电蚀、抗湿闪、抗污闪、耐燃、使用寿命长等特点。可长期工作在污秽环境中及各种气候条件下，是目前交联电力电缆最佳的附件产品。

Silicon rubber series cable accessory can be long-term used at temperature range frpm-60℃~+200℃ keep softy,high-resistance. Ithasgod electricmcdication, ultraviolet rays-resistance, chemistry medication-resistance and physiology inertia -resistance, silicone rubber pre-moulded cabl e accessory has advantage of high-diIectrlc, leakage-resistanceelectric corrosion-resistancewet-flashover resistance and long service life, working under the condition of dirt and various climate. It is the best reliable insuiation.

●绝缘可靠 Reliable insulation

利用特制硅橡胶优良的绝缘性和高弹性，安装后给电缆适当的径向压力，保持与电缆同“呼吸”，使内界面结合紧密：应力控制部份与主绝缘部分复合成一体，有效的解决了电缆半导电层屏蔽切断处的电场集中问题，从而确保绝缘可靠，运行稳定。

Make use of insulated and elasticity of silicon rubber. Add the radial stress to the cable after install, kccp “breath” withcable in order to tighte d inner layer. The part ofstress control andmaininsulation are compounded together.Solving the problem of power fields collection, for the cable screen discontinue position and ensured the reliable insulation, stability running.

●密封性好 Good Sealing

用特制密封胶粘接各连接部位，实现整体密封，杜绝了外界水、潮气等侵入，避免大气环境造成的运行事故。

Sticking each connecting parts with special-maker sealing glue. To realized fulling seale, put an end to outside waler,wet-air. Prevent runningtrouble causedby the atmosphere enviroments.

●产品用途 Application

适用于15KV及以下塑料绝缘电力电缆之间或设备的电气联接。

环境温度-60℃~+200℃，长期工作温度、过载温度和短路温度满足与其配套的挤包电缆的要求。

It is suitable for electric linking of among plastic insulation electric power cable or facilities.

Enviroments temperature: -60℃~+200℃, long-term working temperature, over-load temperature and short circuit temperature meets the demands of packed cable.

硅橡胶预制式、冷缩式电缆附件、可分离连接器

Silicon rubber precast. Cold shrinkable cable accessory. Separated connecting lmplement

●技术说明 Technical description

随着硅橡胶以其优良的综合性能被成功的应用于电缆之后，天吉公司开发了15KV及以下WYZ、NYZ预制式电缆终端头和JYZ预制式电缆直接接头；15KV及以下WYZ/LS、NYZ/LS冷缩预制式电缆终端头和JYZ/LS冷缩预制式电缆直接接头；15KV及以下FJP、FJPK、CJPKB电力电缆用可分离连接器。由于应力控制单元和绝缘部份整体预制在一起，装配工艺有了很大改进。一旦电缆准备完毕，只须将预制体推入指定位置即可。

As silicon rubber apply tothe cable with its good synthesize.TianJi company develop under 15KVand WYZ、NYZ precast cable terminal joints and JYZ precast cable direction joints, under l5KV andWYZ/LS、NYZ/LS cold shrinkable precast cable terminal and JYZ/LS cold shrinkable precast cable direction joints. Under 15KVand FJP,CJPK separated connecting equipment for electric power cable. The installation techniquewasimproved due to the stress control unit and the part of insulalation are precasted together pushing the precastor to the position on-cethe cablewas finished.

●应用控制 Stress control

电缆连接处的具体电气问题，主要出现在电场特别集中处。然而电缆的连接必须切断屏蔽层，会产生不允许的电场集中(图1)，必须采用特殊措施消除。(图2)表示采用锥形应力体进行应力控制的电缆终端电场。按这种方法确定尺寸，绝缘体的场强在任何一点均不超过允许值,这样可以防止有害的电晕或局部放电。(图3)表示直通接头绝缘体的等位线走向。

The specific electric problem ofcable connect place was turn up power fields specific centra. Itmust cut off the screen layer of cable during connect.The unpermit power centre will happened.(picture one)Take special step to eliminate it(picture two)expression adopt core stress control cableterminal powerfields strength should riot exceededtothe permitted numeral It can prevent harmful coronaorpart dlscha、ge(plcturethree) expression the level wire direction of straight joints insulation.

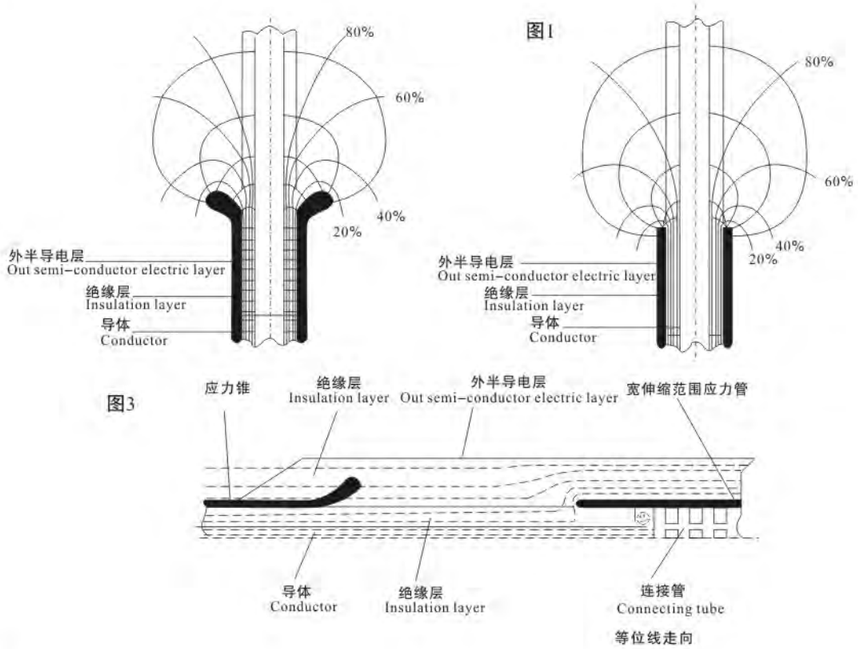

硅橡胶预制式电缆附件

Silicon rubber precast cable accessory

●产品表示方法 Product expression way

□YZ－□□－□－□□□

- 端子类型(T：铜、L：铝、G：铜铝) Terminal type(T-copper L-AluminiumG-copper aluminium)
- 电缆标称截面 Cross-sectional area of cable
- 电缆芯数(1：单芯、3、三芯) Core number of cables (1:Single core 3: Three co re)
- 电压等级(6、15KV) Voltage class
- 预制式 Precast type
- 附件型式(N：户内，W：户外，J：直通接头) Type of accessory (N:indoor W:outdoor J:joint)

例：NYZ-15-3×185T

是指：预制式户内终端，电压等级为15KV的三芯电缆，标称截面185mm²，铜端于连接。

Precast indoorterminal rated at I 5KV three core cable cross-sectional arsa of 185mm².

●中间接头 Intermediate Joints

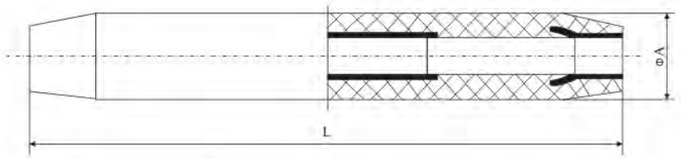

适用电缆绝缘外径mm OD ofcabe insulation Aobector	适用截面mm² Aobector		A	L
	6/10KV	8.7/15KV		
14.0~16.5	25~35	25	46	360
16.5~20.0	50~70	35~50	46	360
19.0~22.5	95	70	46	360
21.5~24.0	120	95	46	360
22.5~25.0	150	120	46	360
24.5~26.5	185	150	56	360
26.5~28.5	240	185	56	360
27.0~30.0	300	240	56	360
29.5~33.5		300	56	360

硅橡胶预制式户内、户外终端

Silicon rubber precast outdoor-indoor terminal

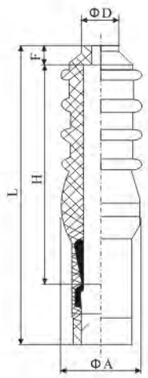

硅橡胶预制式户内终端
Silicon Rubber Precast
indoor terminal
NYZ

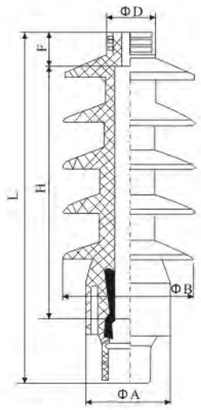

硅橡胶预制式户外终端
Silicon Rubber Precast
outdoor terminal
WYZ

适用电缆绝缘外径mm OD ofcabe insulation Aoboctor	适用截面mm² Aoboctor		WYZ-15						NYZ-15				
	6/10KV	8.7/15KV	A	B	D	F	H	L	A	D	F	H	L
14.0~16.5	25~35	25	64	104	36	28	200	278	46	20	14	146	200
16.5~20.0	50~70	35~50	64	104	36	28	200	278	46	20	14	146	200
19.0~22.5	95	70	64	104	36	28	200	278	46	20	14	146	200
21.5~24.0	120	95	64	104	36	28	200	278	58	27	14	146	200
22.5~25.0	150	120	64	104	36	28	200	278	58	27	14	146	200
24.5~26.5	185	150	70	110	42	28	200	300	58	27	14	146	200
26.5~28.5	240	185	70	110	42	28	220	300	58	27	14	146	200
27.0~30.0	300	240	70	110	42	28	220	300	58	27	14	146	200
29.5~33.5		300	70	110	42	28	220	300	58	27	14	146	200

●订货要求 Demands of order

订货时请注明电缆标称截面、绝缘外径。接线端子材料(全铜、全铝、铜铝)

All the cable section, insulation Dia.Connecting wire terminal material(Whole copper, aluminium)should be signed.

硅橡胶冷缩预制式电缆附件

Silicon rubber cold shrinkable precast cable accessories

●产品表示方法 Product expression way

□ YZ/LS - □□ - □-□□-□

- 端子类型(T：铜、L：铝、G：铜铝)
  Terminal type(T-copper L-AlumimiumG-copperaluminium)
- 电缆标称截面
  Cable section
- 电缆芯数(1：单芯、3：三芯)
  Cable core of number (1:Single core 3:Three core)
- 电压等级(6、15KV)
  Voltage class(6、15KV)
- 铠装电缆加：K
  Armored cabe: K
- 冷缩式
  Cold shrinkable
- 预制式
  Precast type
- 附件型式(N：户内，W：户外，J：直通接头)
  Accessories type (N:indoor W:ouldoor J: joint)

例：WYZ/LS-K15-3-185T

指：冷缩预制式户外终端，额定电压为15KV的铠装三芯电缆，标称截面185mm²，铜端子连接。

Precast indoor terminal rated at 15KV three core cable cross-sectional area of 185mm².

●中间接头 Intermediate Joints

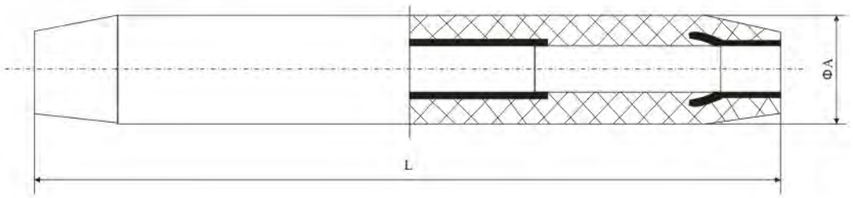

适用电缆绝缘外径mm OD ofcabe insulation Aoboctor	适用截面mm² Aoboctor		A	L
	6/10KV	8.7/15KV		
14.0~16.5	25~35	25	46	360
16.5~20.0	50~70	35~50	46	360
19.0~22.5	95	70	46	360
21.5~24.0	120	95	46	360
22.5~25.0	150	120	46	360
24.5~26.5	185	150	56	360
26.5~28.5	240	185	56	360
27.0~30.0	300	240	56	360
29.5~33.5		300	56	360

硅橡胶冷缩预制式户内、户外终端

Silicon rubber cold shrinkable precast outdoorindoor terminal

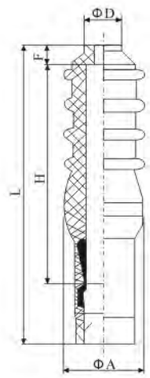

硅橡胶冷缩预制式户内终端
Silicon Rubber cold shrinkable
Precast indoorterminal
NYZ

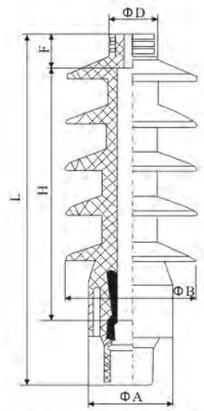

硅橡胶冷缩预制式户外终端
Silicon Rubber cold shrinkable
Precast outdoor terminal
WYZ

适用电缆绝缘外径mm OD ofcabe insulation Aoboctor	适用截面mm² Aoboctor		WYZ-15						NYZ-15				
	6/10KV	8.7/15KV	A	B	D	F	H	L	A	D	F	H	L
14.0~16.5	25~35	25	64	104	36	28	200	278	46	20	14	146	200
16.5~20.0	50~70	35~50	64	104	36	28	200	278	46	20	14	146	200
19.0~22.5	95	70	64	104	36	28	200	278	46	20	14	146	200
21.5~24.0	120	95	64	104	36	28	200	278	58	27	14	146	200
22.5~25.0	150	120	64	104	36	28	200	278	58	27	14	146	200
24.5~26.5	185	150	70	110	42	28	220	300	58	27	14	146	200
26.5~28.5	240	185	70	110	42	28	220	300	58	27	14	146	200
27.0~30.0	300	240	70	110	42	28	220	300	58	27	14	146	200
29.5~33.5		300	70	110	42	28	220	300	58	27	14	146	200

●订货要求 Demands of order

订货时请注明电缆标称截面、绝缘外径。铠装或非铠装电缆，及接线端子材料(全铜、全铝、铜铝)
All the cable section, insulation Dia. Armored or not, and connelting material (whole copper aluminium) should be signed.

硅橡胶冷缩式电缆附件

Silicon rubber cold shrinkable cable accessories

●产品表示方法 P roduct expression way

□ LS - □ □ - □ x □□

- 电缆标称截面 Cable section
- 电缆芯数(1：单芯、3、三芯) Cable core of number (1: Single core 3:Three core)
- 电压等级(6、10、15KV) Voltage class(6、10、15KV)
- 铠装电缆加：K Armored cabe :K
- 附件型式(N：户内，W：户外，J：直通接头) Auessories type (N:indoor W:outdoor J:joint)

例：NLS-15-3×185
指：电压等级为15kV，标称截面185mm²三芯交联电缆用的冷缩式尸内终端。
Denote:the cool-compressing style indoor terminal for three-core crosslinking cable with 15kV voltage grade and 185mm² nominal crossing section.

例：WYZ-15-1×185
指：电压等级为15kV，标称截面185mm²单芯交联电缆用的冷缩式户外终端。
Denote:the cool-compressing style outdoor terminal for single-core crosslinking cable with 15kV voltage grade and 185mm² nominal crossing section.

●中间接头 Intermediate Joints

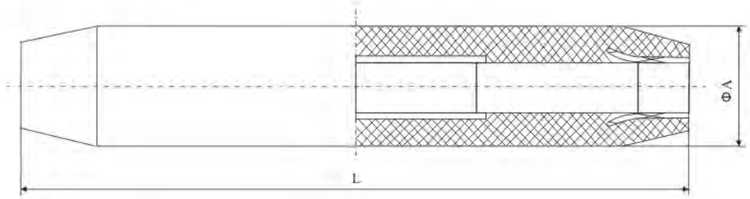

适用电缆绝缘外径mm OD of cableinsulation Aoboctor	适用截面mm² Aoboctor		A	L
	6/10KV	8.7/15KV		
14.0~16.5	25~35	25	46	360
16.5~20.0	50~70	35~50	46	360
19.0~22.5	95	70	46	360
21.5~24.0	120	95	46	360
22.5~25.0	150	120	46	360
24.5~26.5	185	150	46	360
26.5~28.5	240	185	56	360
27.0~30.0	300	240	56	360
29.5~33.5		300	56	360

硅橡胶冷缩户内、户外终端

Silicon rubber cold shrinkable outdoorindoor terminal

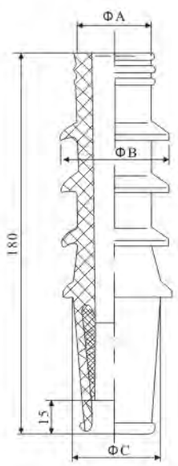

硅像胶冷缩式户内终端
Silicon Rubber cold shrinkable
Indoor terminal
NLS

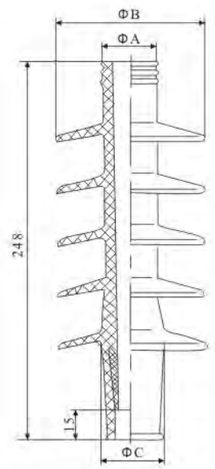

硅像胶冷缩式户外终端
Silicon rubber cold shrinkable
outdoor terminal
WLS

适用电缆绝缘外径mm OD ofcabe insulation Aobector	适用截面mm² Aobector		WLS-15			NLS-15		
	6/10KV	8.7/15KV	A	B	C	A	B	C
16~20	25~70	25~50	27	88	33.5	27	43	33.5
20~25	95~150	70~120	30	90	36.5	30	46	36.5
25~30	185~300	150~240	35.5	98.5	42	35.5	51.5	42
30~35	400	300~400	40	100	46.5	40	56	46.5

●订货要求 Demands of order

订货时请注明电缆标称截面、绝缘外径。铠装或非铠装电缆。
All the cable section, insulation Dia. Armored or not should be signed.

电力电缆用可分离连接器、避雷器

Electric power cable separated connecting implement,arrester

本公司生产的可分离连接器，是电缆分支箱的主要部件，可满足不同进出线回路的要求。它也是环网柜配套产品，可满足高质量环网柜的全绝缘要求。

可分离连接器是全绝缘产品，可分为屏蔽和非屏蔽两种类型，分别满足不同安装地点的不同要求。

可分离连接器适用于电缆截面25~400mm²的电缆终端。其额定电流最大为630A。

本公司生产的电缆可分离连接器的性能，符合国标GB11033和相应的国际标准IEC60502.4-1997和IEEE std 386-1995的相关要求。产品通过国家电力公司电气设备质量检验测试中心的型式试验。

Separated connecting implement is the main part of cable branch box. It can meets the demands of different enler-exit line and insulation of high-quality loop net cabinet with loop net cabinet assoicated products.

Separated connecting implement is fully insulation products. It included two type: Screen and Non-screen.Each products can meets the differents of demands for different installation location.

Separated connecting implement is suitable for 25-400mm² section ofcable terminal. Rated current is 630A.

The performance of cable separated connecting implement can meets the demands ofGB 11033.IEC60502,4-1997. IEEE 386-1995.The products are tested by the national electric power company electric facilities quality test center.

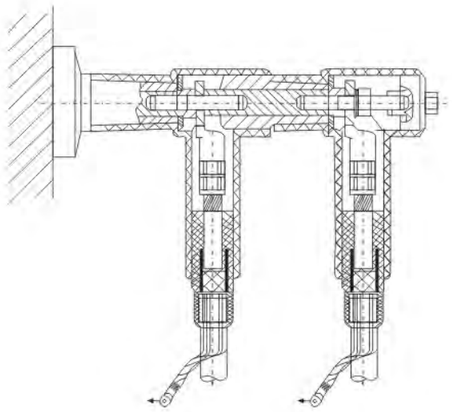

非屏蔽硅橡胶可分离连接终端
Non-screen silicon rubber
separated connecting terminal

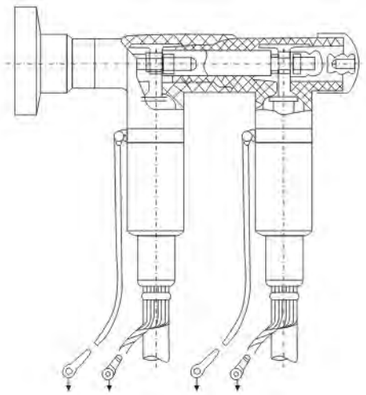

屏蔽硅橡胶可分离连接终端
Screen silicon rubber
separated connecting terminal

电力电缆可分离连接器、避雷器

Electric power cable separated connecting implement,arrester

●产品表示方法 P roduct expression way

FJ □□□ /LS-12/□□-□

- 导线截面(25~400mm²)
  Section(25~400mm²)
- 工作电流(200A,400A,630A)
  Current(200A,400A,630A)
- 额定电压：12kV
  Rated voltage 12kV
- 带LS为冷缩配件
  Cold shrink precastwith LS
- 带B为避雷器(17/50)
  Arresterwith B(17/50)
- 带P为屏蔽式，不带为非屏蔽
  Screen type with P
- 带K为后接头，不带为前接头
  Behind joints with K
- 可分离连接器
  Separated connecting implement

例：FJP-12/630-240

表示：适用于额定电压12KV，工作电流630A，240mm²电缆的屏蔽电缆可分离连接器前接头。

例：FJKPB 12/630

表示：适用于额定电压12KV，工作电流630A电缆的屏蔽电缆插接避雷器后接头。

例：FJPK-LS-12/630-240

表示：适用于额定电压12KV，工作电流630A，240mm²电缆的屏蔽电缆可分离连接器后接头，绝缘护套管和三指套为冷缩式。

Example: FJP-12/630-240

Expression:suitable for 12KV Rated voltage,630A Current,240mm²cable.The frontjoints ofthe screen cable separated connection implement.

Example: FJKPB-12/630

Expression:suitablefor12KV Rated voltage.630ACurrent back joints ofthe screen cable insert-receive arrester.

Example:FJPK-LS-12/630-240

Expression:suitable for 12KV Rated voltage, 630A current,240mm²cable.The backjoims of the screen cable separated connection implement.

The insulation protection covertube andthreefinger cover are cold shrikable-type.

Pengyou
Pengyou power fitting
电缆附件
POWER CABLE ACCESSORIES

电力电缆可分离连接器、避雷器

Electric powe r cable separated connecting implement,arrester

本公司生产的电缆可分离连接器、避雷器，符合GBl1033、IEC60502.4、和IE标准。并经国家电力公司武高所，检测合格。

Our factory product the cable separated connecting equipment, arrester meets GB l1033, IEC60502.4,VDE 0278 standard, All are qualified through the test of electric company (WUGAO institute).

●非屏蔽可分离连接器 (不可触摸)

Nonscreen separated connecting equipment(untouch)

适用于截面为25~400mm²额定电压为12KV交联电缆，最大电流630A。

该产品具有结构紧凑、安装简便、全密封等特点。

CJ-12/630前接头，安装时用螺栓连接在套管上。

套管符合DIN47636标准：大端56小端46长90mm。

CJ2-12/630后接头，安装时连接前接头的后端。

It issuitable for 25-300mm²section 12KV cross-linkingRated voltage max Voltage:630A.

Thisproduct has advantage ofcompact structure. Easy installation, Whole sealing

CJ-12/630 front joints connect withtube during installing ,TubemeetsDIN 47636standard:big terminal 56mm, small termina190mm.

CJ-12/630 back joints connetringfront joints ofbuck end ofduring installing frontjoints.

●屏蔽可分离连接器(可触摸)

Screen separated connecting equipment(touch)

适用于截面为25~400mm²额定电压为12kV交联电缆，最大电流630A。

该产品由于表面接地，运行时更安全可靠。

CJP-12/630前接头，安装时用螺栓连接在套管上。套管符合DIN47636标准：大端56小端46长90mm。

CJ2P-12/630后接头，安装时连接前接头的后端。

lt is suitable for 25-300mn²of section,Rated voltage I5kV cross-linking cable,max.Current:630A.

Safety running of product due tosurface earthed.CJP-12/630front joint connecting tube with bolt during installing, tubemeetsDIN47636 Standard:big terminal 56mm.Smallterminal 90mm.

CJ2P 12/630 back joints connect with back end ofduring installing.

FJB-12普通
前接式避雷器
FJB 12 ordinaryfront connecting type arrester

FJKB-12普通
后接式避雷器
FJKB-12 ordinary back connecting type arrester

FJPB-12屏蔽
前接式避雷器
FJPB-12 ordinary front connecting type arrester

FJKPB-12屏蔽
后接式避雷器
FJKPB-12 ordinary back connecting type arrester

可分离连接器、避雷器
Separated connectlng implement arrester

电缆可分离连接器以其全绝缘、全密封、结构紧凑、安装方便等特点。将成为我国电缆终端的新一代产品，采用独特的冷缩技术，安装时不必动火，您只须轻轻的抽取塑料膨带。

Cable separated connecting implement will become the newly product oPour country with its whole insulation, sealing, compact structure, easy installing and so on

It adopt special cold shrinkable technique need n’ t use fire during installing . It need draw out plastic swell tape

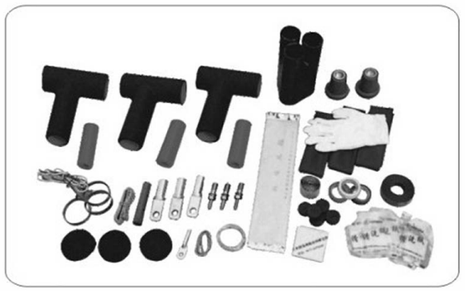

FJP-12/630电缆可分离连接器前接头
FJP-12/630 precast cable separated connecting implement frontjoints

FJP-12/630电缆可分离连接器前接头(冷缩)
FJP-12/630 precast cable separated connecting implement front joints(cold shrinkable)

FJKP-12/630预制式电缆连接器后接头
FJKP-12/630 precast cable connecting implement back joints

FJKP/LS-12/630电缆可分离连接器后接器(冷缩)
FJKP/LS-12/630 Cable separated connecting imp lement back joints(coId shrinkable)

FJKPB-12屏蔽前接式避雷器
FJKPB-12Screen front connecting type attester

FJKP/LS-12屏蔽后接式避雷器
FJKP/LS-12Screen back connecting type arrester

施工工具
Power line tools

压接范围：2，4，6（mm^2）
Crimp connection range:2,4,6(mm^2)
DG-6M 塑套冷压钳
DG-6M stic shell coolpressure plier

压接范围：3.8 ,6.3（mm^2）
Crimp connection range:3.8,6.3(mm^2)
DG-6.3M 插簧钳
DG-6.3M

压接范围：3.5,6,8（mm^2）
Crimp connection ange:3.5,6,8(mm^2)
DG-8Y 压线帽钳
DG-8Y Press l ing cap plier

压接范围：0.5,2.5（mm^2）
Crimp conneclion range·0.5,2.5(mm^2)
DG-104A 剥线钳
DG-104A Wire stripper

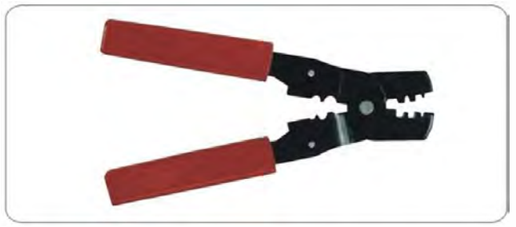

压接范围：1.3,2.5,4.8（mm^2）
Crimp connection range:1.3,2.5,4.8(mm^2)
DG-4.3U 插簧钳
DG-4.3U

压接范围：16-240 铝线，16-240铜线
Crimp connection range:16-240 aluminium wire,16-150copper wire
QX-50 强力机械工钳
QX-50Machnicnl tool plier

压接范围：1.5-10（mm^2）
Crimp connection range:1.5-l0(mm^2)
机械压接钳
Machnicnl tool plier

压接范围：16-300 铝线，16-300铜线
Crimp connection range:16-300 aluminium wire,16-240copper wire
YQK16-300 液压钳
YQK16-300Raulic pressure plier

压接范围：60mm^2以下的电缆线
Crimp connection range:cable less than 60mm^2 wire, 16-150 copper wire
线缆钳
Cablc pmcers